PERI UP Rosett
Stair Alu 64 with Deck UDS

Assembly Instructions for Standard Configuration

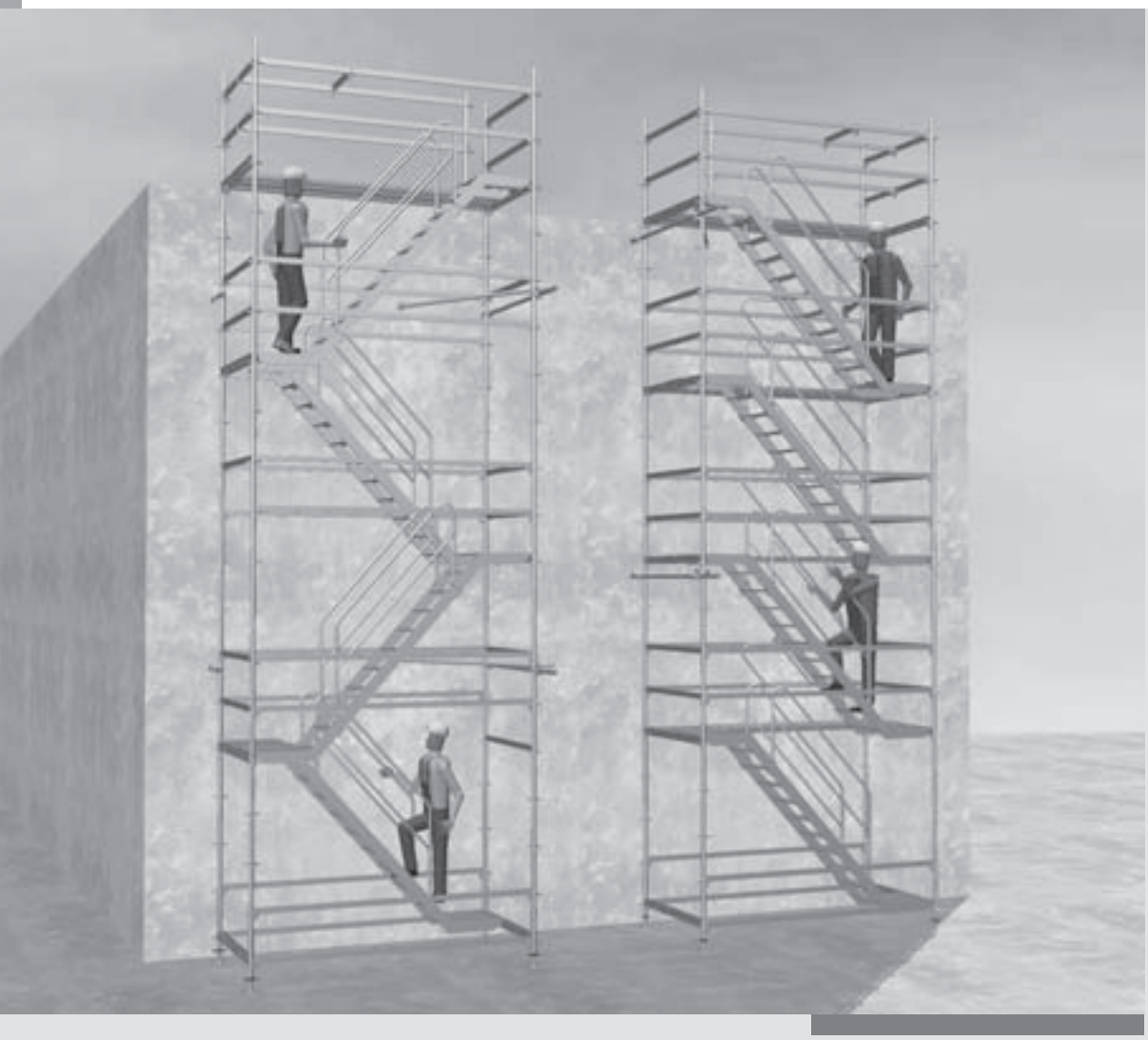

Edition 02 | 2012

Content

Key

Safety Instructions | Note | Visual Check | Tip

Introduction

Overview, Main Components

Stair tower with alternating staircase units

Stair Tower with staircase units in the same direction

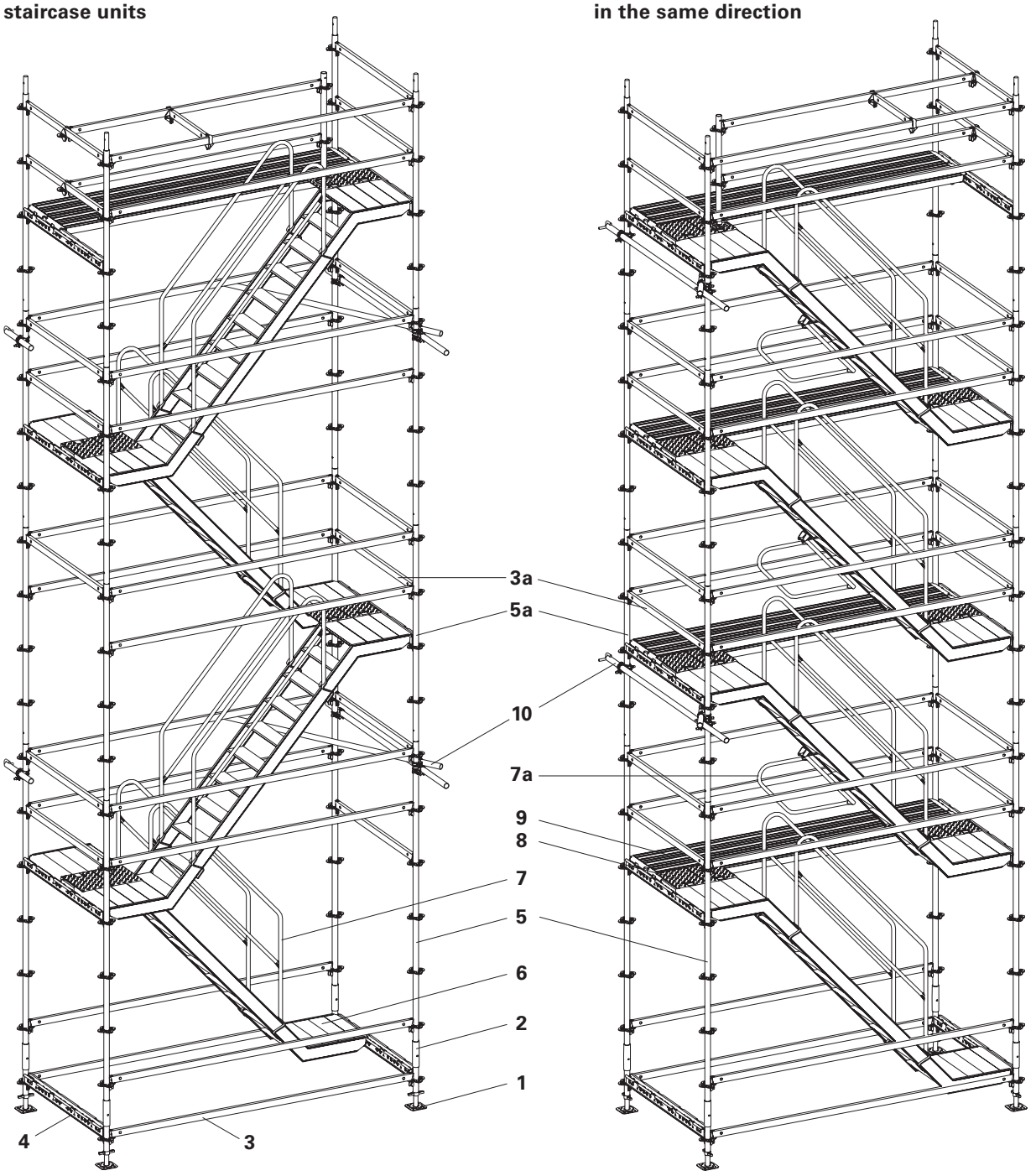

1 Adjustable Base Plate UJB
2 Base Standard UVB 24
3 Ledger UH 300
3a Ledger UH 150
4 Decking Transom UHD 150
5 Standard UVR 300
5a Standard UVR 200
6 Staircase UAS 300/200
7 Stair Guardrail UAG
7a Stair Guardrail UAH
8 Landing Link Panel UAB 30
9 Steel Deck UDS 32 x 300
10 Anchorage compl. for one level

Introduction

Standard Configuration

General
These Assembly Instructions apply together with the Approval No. Z-8.22-863 "PERI UP Rosett Modular System".

They describe the generally-recognised standard configuration for stair towers with the staircase units in the same direction and stair towers with alternating staircase units as a means of access for temporary work to be carried out on working areas situated above ground level.

Features
The stair is based on PERI UP modular scaffold with supplementary components.

For use as stair tower with alternating staircase units or with units in the same direction from 2.0 m up to a maximum 70.0 m assembly height.

Clear tread width 58 cm, width of staircase 62 cm.

Permitted loads: for flights of stairs and decking
2.0 kN/m²
for the complete construction
2,0 kN/m²
per 20 linear metres

Stairway corresponds to class A in accordance with EN 12811, Part 1.

System Dimensions
Version 1: 150 x 250 cm
Version 2: 150 x 300 cm
Storey height 200 cm

Intended Use

1. PERI products have been designed as technical work equipment for exclusive use in the industrial and commercial sectors by suitably trained personnel.

2. These assembly instructions serve as the basis for the project-related risk assessment and the instructions for the provision and use of the system by the contractor (user). However, this do not replace these.

3. Only PERI original components may be used. The use of other products and spare parts represents a misapplication with associated safety risks.

4. The components are to be inspected before each use to ensure that they are in perfect condition and function correctly.

5. Changes to PERI components are not permitted and represent a misapplication with associated safety risks.

6. Safety instructions and permissible loads must be observed at all times.

7. Components provided by the contractor must conform with the characteristics required in these assembly instructions as well as all valid construction guidelines and standards.

In particular, the following apply if nothing else is specified:
- timber components: Strength Class C24 for Solid Wood EN 338.
- scaffold tubes: galvanised steel tubing with minimum dimensions Ø 48.3 x 3.2 mm according to EN 12811-1:2003 4.2.1.2.
- scaffold tube couplings according to EN 74.

8. Deviations from the standard configuration may only be carried out after a separate risk assessment has been completed by the contractor (user). On this basis, appropriate measures for the working safety and stability are to be implemented.

Introduction

Safety Instructions

General

1. Deviations from the standard configuration and/or intended use present a potential safety risk.

2. All country-specific laws, standards and other safety regulations are to be taken into account whenever our products are used.

3. During unfavourable weather conditions, suitable precautions and measures are to be taken in order to ensure both working safety and stability.

4. The contractor (user) must ensure the stability throughout all phases of construction. He must ensure and verify that all loads which occur are safely transferred.

5. The contractor (user) has to provide safe working areas for site personnel which are to be reached through the provision of safe access ways. Areas of risk must be cordoned off and clearly marked. Hatches and openings on accessible working areas must be kept closed during working operations.

6. For better comprehensibility, detailed drawings are partly incomplete. The safety installations which have possibly not been featured in these detailed drawings must nevertheless be available.

Storage and Transportation

1. Do not drop the components.

2. Store and transport components ensuring that no unintentional change in their position is possible. Detach lifting gear from the lowered units only if these are in a stable position and no unintentional change is possible.

3. When moving the components, make sure they are lifted and set down so that any unintentional tilting over, falling apart, sliding or rolling away are avoided.

4. Use only suitable load-carrying equipment to move the components as well as the designated load-bearing points.

5. During the lifting and moving procedure, ensure all loose parts are removed or secured.

6. During the moving procedure, always use a guide rope.

7. Move components on clean, flat and sufficiently load-bearing surfaces only.

System-specific

1. Only use designated PERI lifting gear.

2. The load-bearing capacity of the connectors between the wall ties and the anchoring base must be proven for the anchor loads.

General

Additional PERI product information

– Approval No. Z-8.22-863
  "PERI UP Rosett" modular system

The assemblies shown in these PERI assembly instructions are only examples which feature only one component size. They are accordingly valid for all component sizes contained in the standard configuration.

Introduction

Classification

For the realisation of the work, the following identification markings in particular are to be taken into consideration:
If certain parts of the scaffolding are not ready for use – especially during assembly, modification work and dismantling – a "No entry" warning sign restricting access must be clearly displayed (see Sign 1).
In addition, it must be made clear through appropriate physical means that the scaffold is not fully erected and may not be accessed.

Sign 1

Sign 2

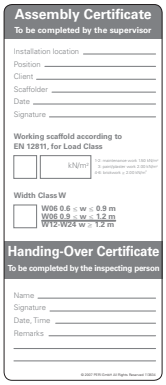

After handover, the scaffold access points are to be marked in such a way so that the intended use is clearly visible (Sign 2).
The signs do not replace the inspection record!

Inspection and hand-over

The erected scaffolding must by inspected by the scaffold contractor in order to determine that assembly has been carried out correctly. If the scaffolding contractor is convinced that the scaffold has been correctly erected, he can then hand it over to the user. It is advisable to carry out the hand-over together with the user and, for example, document this in a written report.

During the hand-over, the scaffolding contractor must advise the user of the possible risks involved with non-intended use and his obligation to provide adequate prevention against risk and danger!

Selected bay length

Changes to bay length 250 cm

Assembly of stair towers with alternating staircase units and stair towers with staircase units in the same direction for a bay length of 300 cm is described in chapters A1 to A4 and C1 to C4.

The figures apply accordingly for the smaller bay length of 250 cm.

The following parts must be replaced or reduced:

– Ledger UH 300 (3)
Ledger UH 250

– Ledger UH 250 (3b)
Ledger UH 200

– Staircase UAS 300/200 (6)
Staircase UAS 250/200

– Steel Deck UDS 32 x 300 (9)
Steel Deck UDS 32 x 250

– Install 1 Landing Link Panel UAB

Stair tower with alternating staircase units

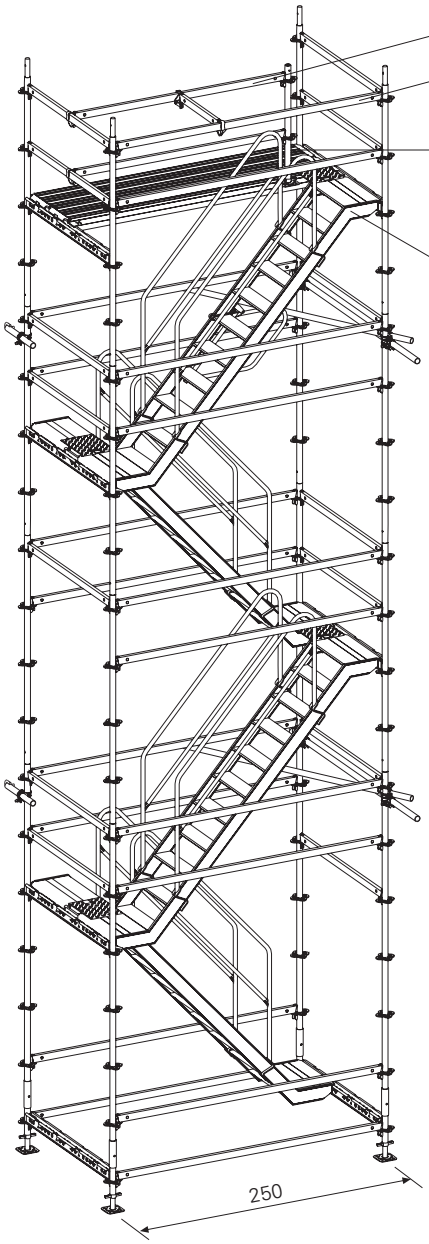

Stair tower with staircase units in the same direction

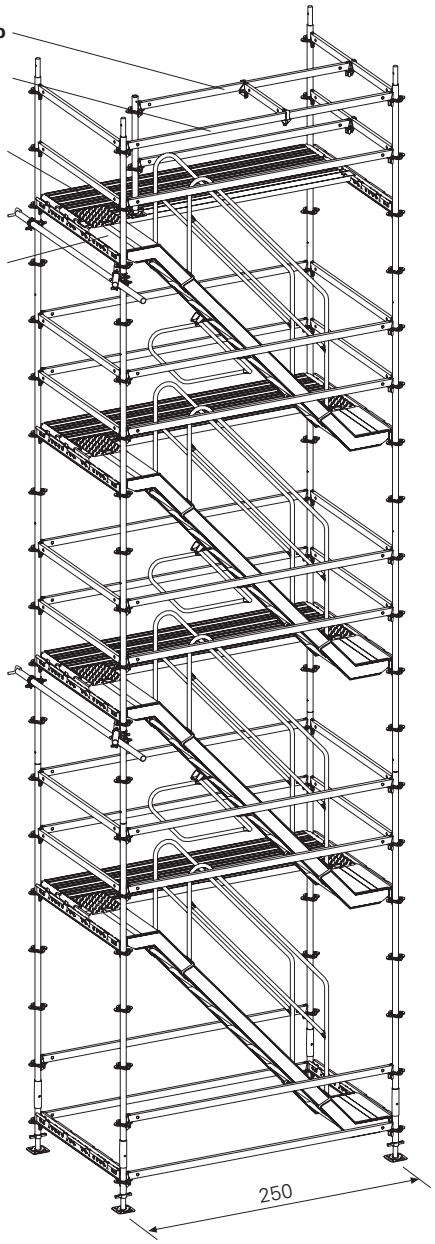

A Alternating staircase units

Stair tower with anchorage and access to the building

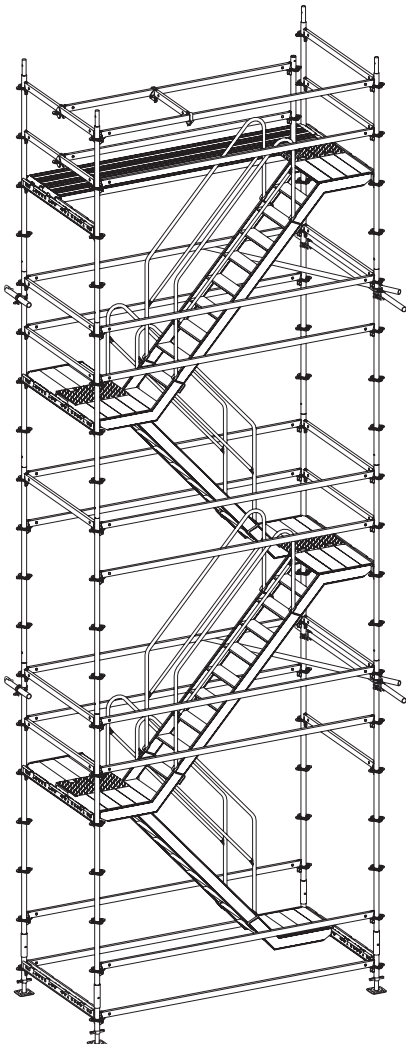

Stair Top Guardrail

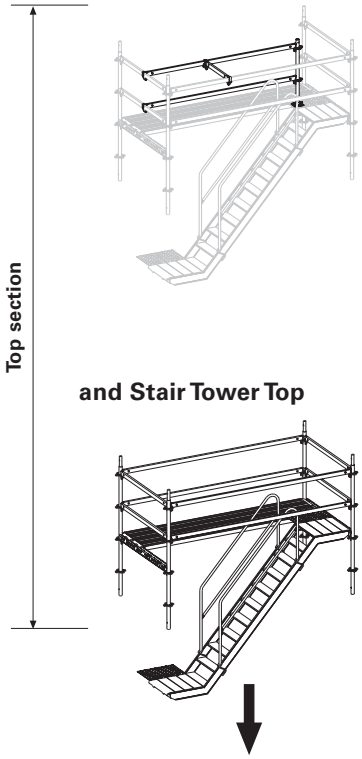

and Stair Tower Top

Stair Tower Plus

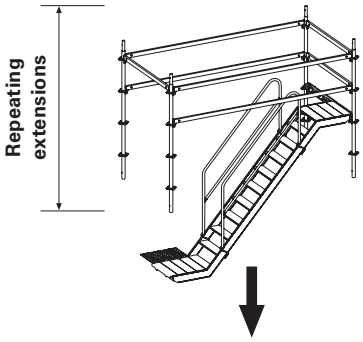

Stair Tower Basic-P

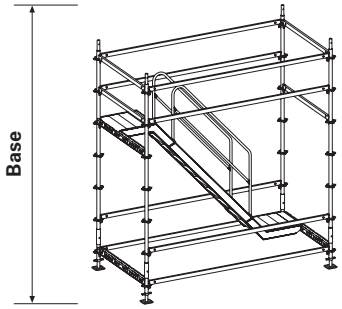

A1 Assembly Basic-P

Stair Tower Basic-P

The assembly sequence shown in the following sections can be complemented by other measures which are presented in Chapter E Working Safety during Assembly and Dismantling as well as assembly with the crane.

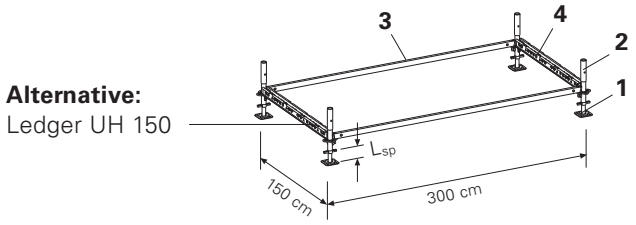

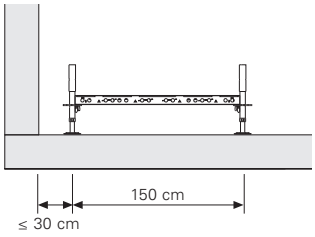

A1.1 Base level

1	Adjustable Base Plate UJB	4x
2	Base Standard UVB 24	4x
3	Ledger UH 300	2x
4	Decking Transom UHD 150	2x

Assembly
1. Assemble frame.
Distance to building ≤ 30 cm.
2. Horizontally align frame by adjusting the Adjustable Base Plates.
Spindle extension:
– for assembly heights up to 36 m: L_{sp} ≤ 30 cm,
– for assembly heights over 36 m: L_{sp} ≤ 20 cm.

3. Securely fix all the wedges on the transoms and ledgers using a 500 g hammer.

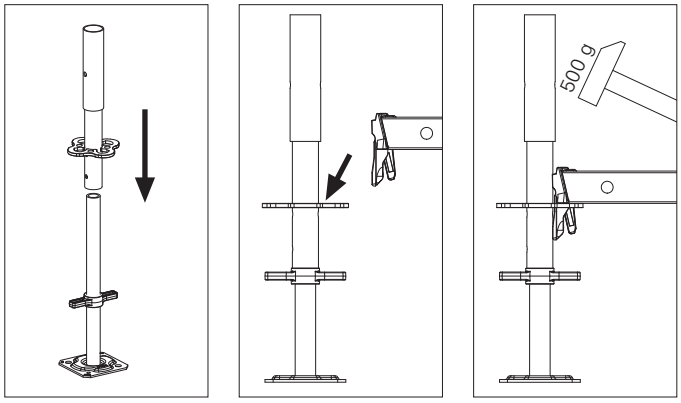

Install Base Standards and standards with holes lined up. This procedure allows that the Locking Pins can be always installed easily for crane use.

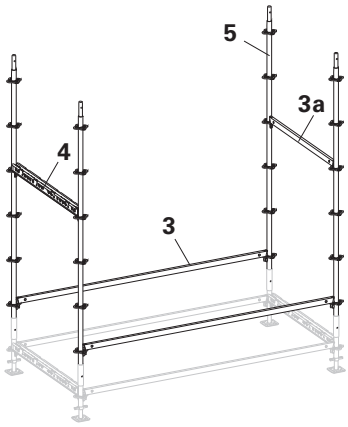

A1.2 Standards and Ledgers

5	Standard UVR 300	4x
3a	Ledger UH 150	1x
3	Ledger UH 300	2x
4	Decking Transom UHD 150	1x

Assembly
1. Insert Standards UVR.
2. Attach Decking Transom UHD 150 and Ledger UH 150 and secure wedges with hammer blow.
3. Attach Ledgers UH 300 and secure wedges with hammer blow.

A1 Assembly Basic-P

A1.3 Staircase and Guardrails

6	Staircase UAS 300/200	1x
7	Stair Guardrail UAG	2x
3a	Ledger UH 150	3x
3	Ledger UH 300	4x

Assembly
1. Attach staircase UAS to Decking Transom UHD and push outwards until stop position is reached (= secured).
2. Mount stair guardrails UAG in the position shown.
3. Attach ledgers UH on all sides as guardrail and secure with hammer blow.

For an easier and safer assembly process a steel deck UDS or scaffold planks can be installed on the base level.

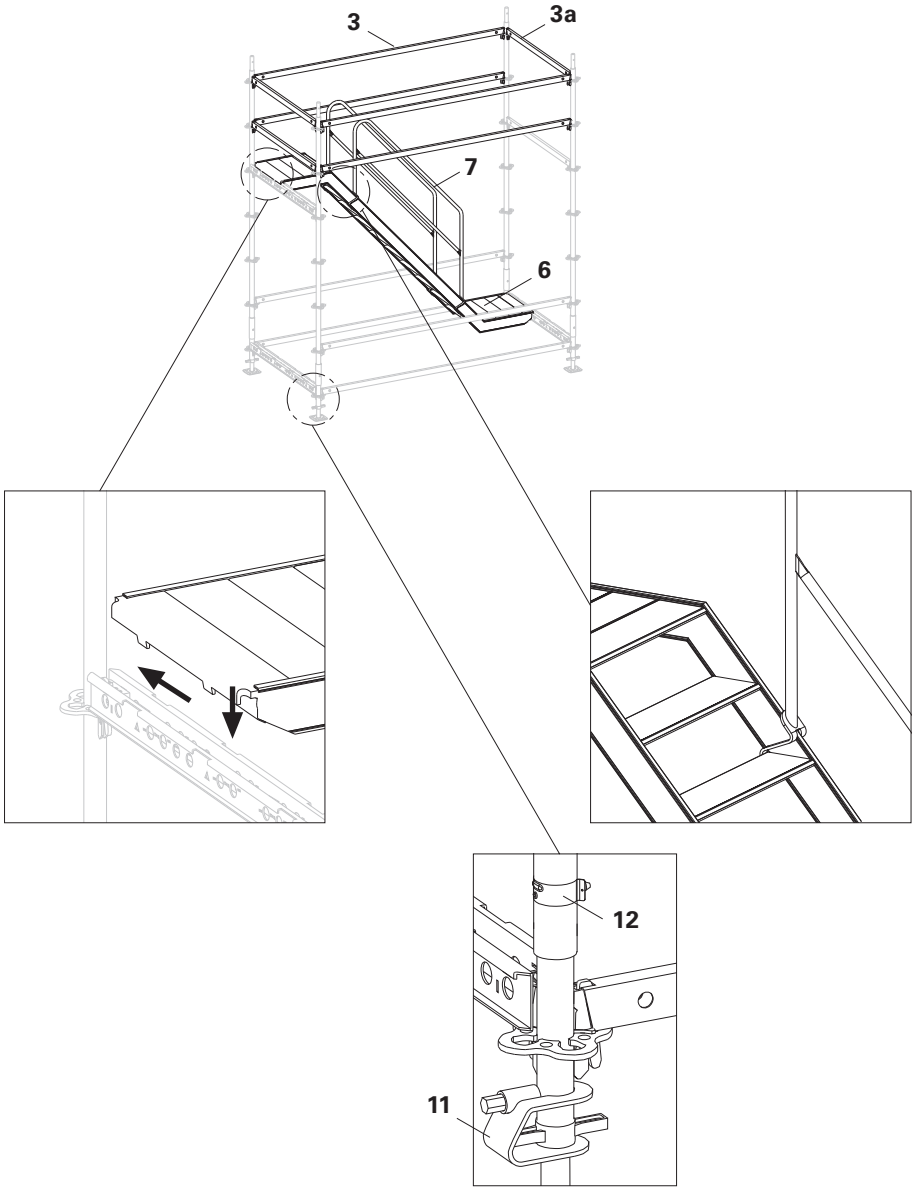

Moving by crane

11	Spindle Locking UJS	4x
12	Locking Pin Ø 48/57	4x

Assembly
1. Secure adjustable base plate UJB with spindle locking UJS.
2. Positively connect base standard UVB and standards UVR by means of locking pin.

A2 Assembly Extensions

Stair Tower Plus

The number of extensions with Stair Tower Plus depends on the height required and is repeated accordingly, see plan.

A2.1 Standards and Transoms

5a	Standard UVR 200	4x
4	Decking Transom UHD 150	1x

Assembly
1. Insert Standards UVR.
2. Mount Decking Transoms UHD and securely fix the wedges with hammer blow.
3. Progressively install anchoring, see A4.

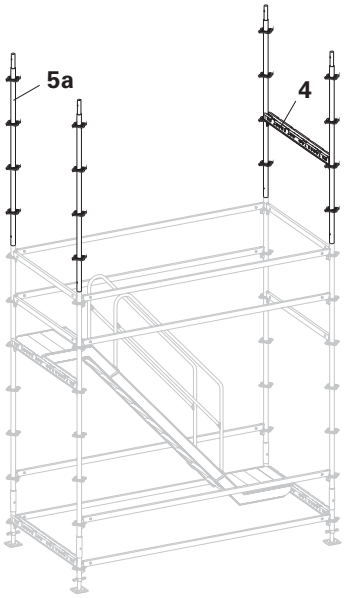

A2.2 Staircase and Guardrails

6	Staircase UAS 300/200	1x
7	Stair Guardrail UAG	2x
8	Landing Link Panel UAB 30	2x
3a	Ledger UH 150	3x
3	Ledger UH 300	4x

Assembly
1. Attach staircase UAS to Decking Transom UHD and push outwards until stop position is reached (= secured).
2. Mount stair guardrails UAG in the position shown.
3. Install Landing Link Panels UAB between landings.
4. Attach ledgers UH on all sides as guardrail and secure wedges with hammer blow.

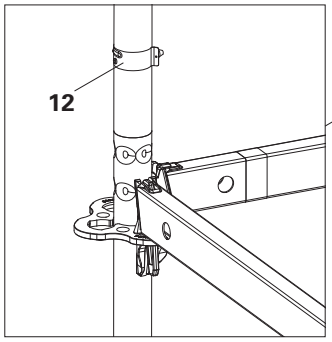

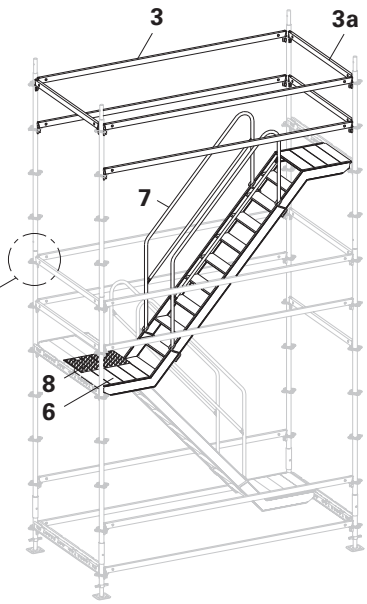

Moving by crane

12	Locking Pin Ø 48/57	4x

Assembly
Connect standards UVR with locking pin.

A3 Assembly Top Section

Stair Tower Top

A3.1 Standards and Transoms

5a	Standard UVR 200	4x
4	Decking Transom UHD 150	2x

Assembly
1. Insert Standards UVR.
2. Mount Decking Transoms UHD and securely fix the wedges with hammer blow.

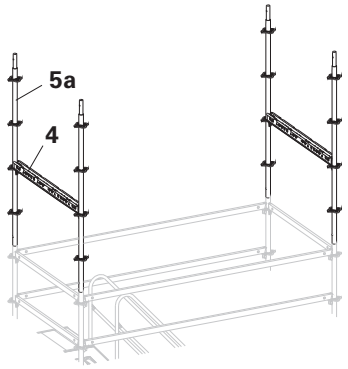

A3.2 Staircase and Guardrails

6	Staircase UAS 300/200	1x
7	Stair Guardrail UAG	2x
8	Landing Link Panel UAB 30	4x
9	Steel Deck UDS 32 x 300	2x
3a	Ledger UH 150	4x
3	Ledger UH 300	4x

Assembly
1. Attach staircase UAS to Decking Transom UHD and push outwards until stop position is reached (= secured).
2. Mount stair guardrails UAG in the position shown.
3. Install Landing Link Panels UAB between lower landings.
4. Mount Steel Decks UDS and push outwards until stop position is reached (= secured).
5. Install landing link panels UAB above between the landing and deck.
6. Attach ledgers UH on all sides as guardrail and secure with hammer blow.

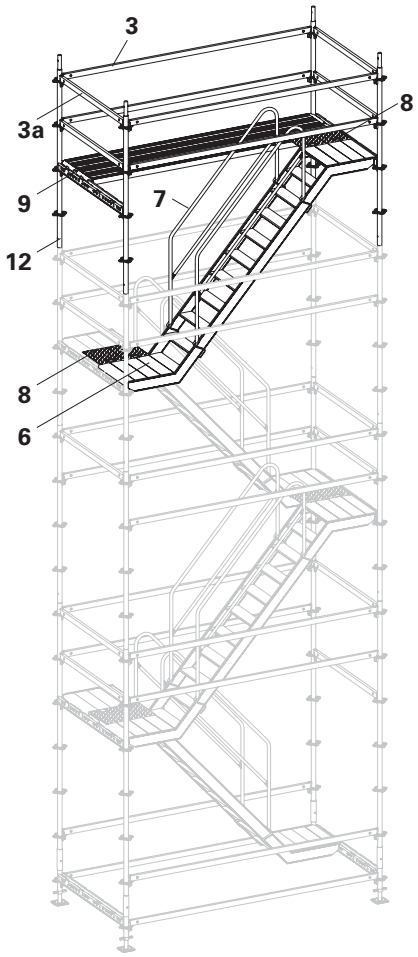

Moving by crane

12	Locking Pin Ø 48/57	4x

Assembly
Connect standards UVR with locking pin.

A3 Assembly Top Section

A3.3 Access to the Building

The Stair Tower Top receives an additional guardrail for safety for access to the building.

1	Adjustable Base Plate UJB	1x
5b	Top Standard UVH 100	1x
13	Ledger-to-Ledger Coupler UHA	4x
3b	Ledger UH 250	2x
3c	Ledger UH 75	1x

Assembly
1. Install ledger-to-ledger couplers UHA on the front elevation.
2. Place adjustable base plate UJB with top standard UVH on steel deck (2.50 m spacing).
3. Attach ledgers UH 250 to ledger-to-ledger coupler UHA and top standard UVH and secure with hammer blow.
4. Mount Ledger UH 75 with ledger-to-ledger coupler UHA between the guardrails (approx. middle of ledger UH 250).
5. Dismantle ledgers UH to give access to the building.

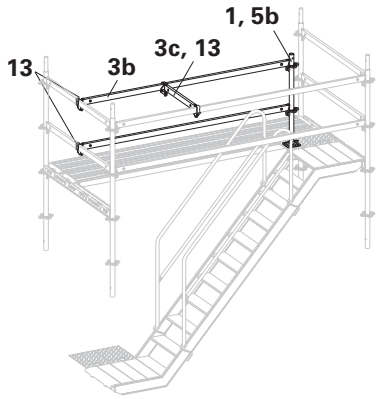

A3.4 Intermediate Access

is possible every second floor.

Additionally components required:

14	Ledger Brace UBL 300/200 alternatively: Scaffold Tube 48.3 x 3.2 mm and Swivel Couplings DK 48/48

Measures to be taken on the wall face (inside):
- raise and lower ledgers UH 300
- mount Ledger Braces UBL at floor levels without access
- additional anchors, see B3.1

Over 56 m heights
- Insert Ledger Braces UBL continuously up to 16 m heigh (wall side only)

View of wall side

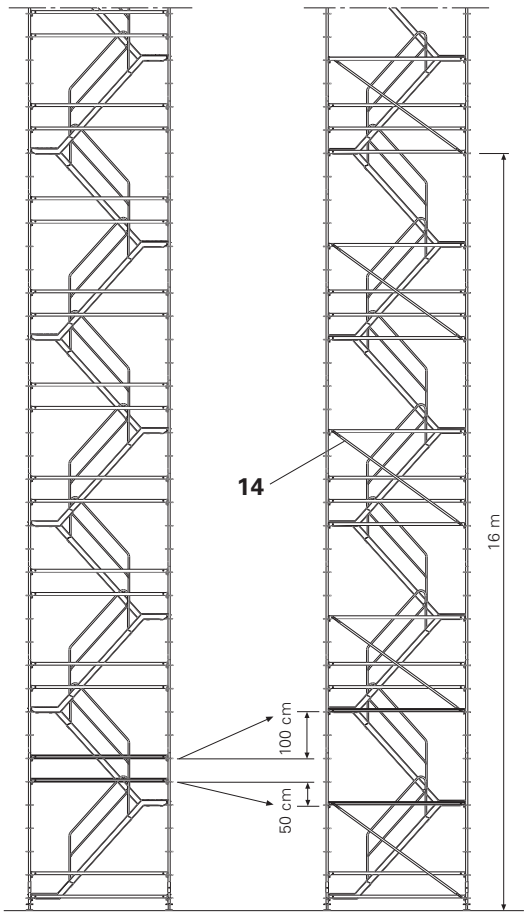

A4 Anchorage / A5 Dismantling

Anchors do not carry vertical loads!

- Anchors should be installed progressively with the erection of the scaffolding.
- Fix with bolts M12, or equivalent connection.
- The load-bearing capacity of the connectors between the wall ties and the anchoring base must be proven for the anchor loads in the tables in Section B3.
- Insert the first anchor at a height of 3.0 m. The position of the other anchors is given in the anchor pattern tables in B3.
- Each anchor position consists of a short anchor and a triangulated anchor.

A4.1 Short Anchor

10.1 Wall Tie UWT 45	1x
10.2 Swivel Coupling DK 48/48	1x

Assembly

1. Fix swivel coupling with Wall Tie UWT 45 to the inner leg.
2. Fix wall tie to the wall, e.g. with ring bolts M12 and dowels (or equivalent connection).

A4.2 Triangulated Anchor

10.3 Wall Tie UWT 220	2x
10.4 Standard Coupler NK 48/48	3x

Assembly

1. Fix the first Wall Tie UWT 220 with standard couplers to the inner and outer Standards UVR.
2. Fix the second Wall Tie UWT 220 with standard couplers to the outer Standard UVR.
3. Fix wall tie to the wall, e.g. with ring bolts M12 and dowels (or equivalent connection).

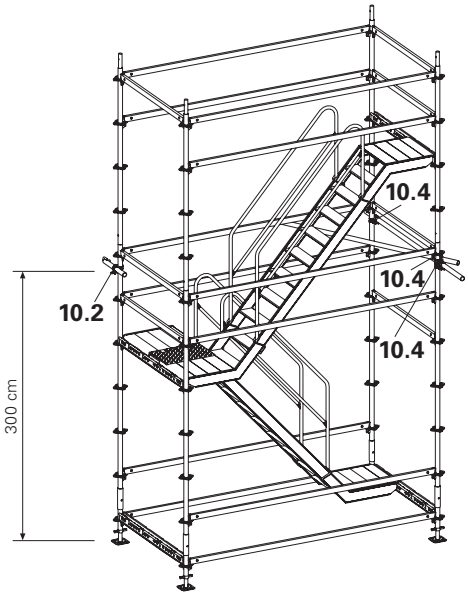

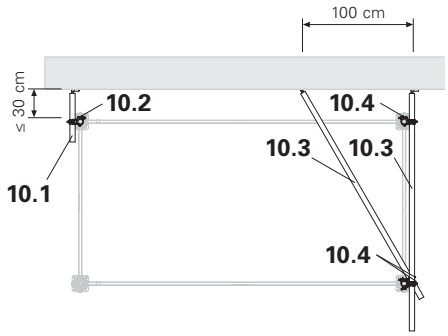

A5 Dismantling

- Dismantle from top to bottom, in reverse order to the erection sequence.
- Dismantle the anchors from the staircase progressively from top to bottom.
- In the event of work disruptions, the top level must not be extended more than 3.0 m beyond the last anchor position.

B1 Live Loads

B1.1 Loads on Staircase UAS 250/200 and UAS 300/200

The permitted load for the flights of stairs is p = 2.0 kN/m²
(on landings and steps).

Staircase UAS 250/200
or UAS 300/200

p = 2,0 kN/m²

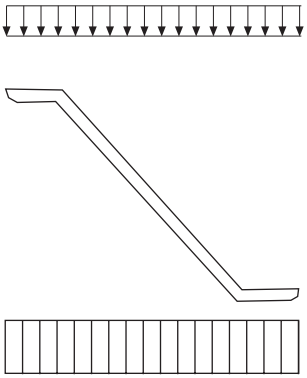

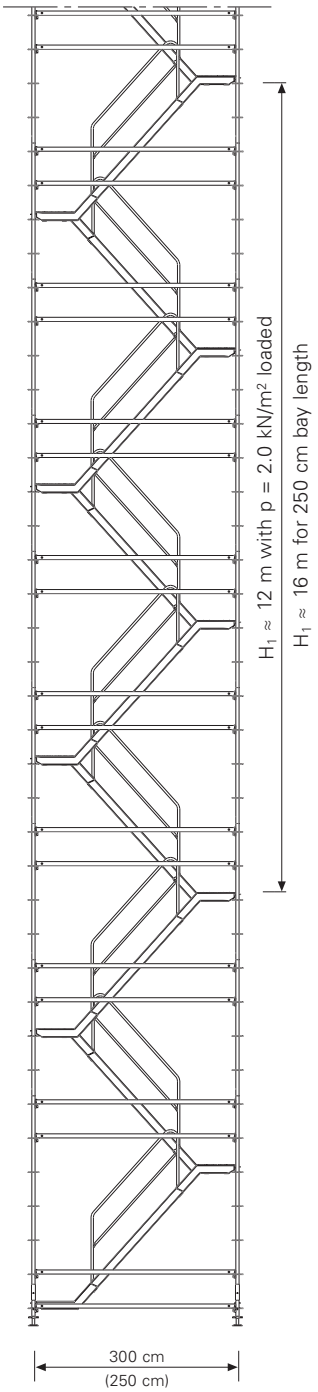

B1.2 Loads on Stair Towers

A stair tower consists of several flights of stairs, which are arranged above one another like a tower.

The permitted load of the stair tower is p = 2.0 kN/m² for a maximum length of 20 linear metres of stairway.

For stairs with a bay length of 3.0 m approx. 6 levels are loaded, for a length of 2.50 m it is approx. 8 levels.

B2 Reaction Forces

Reaction forces on the legs

The reaction forces for the stair towers are given in the table depending on overall height and bay length.

Table 1

	Foundation for complete tower		Foundation for individual standards		Stair tower with alternating staircase units
Tower height	**medium leg loads**		**max. leg loads**		
[m]	Bay length 250 cm [kN]	Bay length 300 cm [kN]	Bay length 250 cm [kN]	Bay length 300 cm [kN]	
2.3	2.1	2.5	3.0	3.5	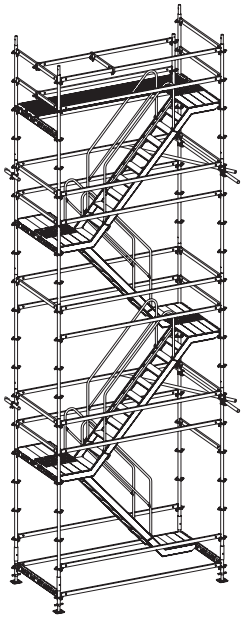
4.3	3.2	3.7	4.5	5.3	
6.3	4.3	5.0	6.0	7.0	
8.3	5.4	6.2	7.5	8.8	
10.3	6.4	7.4	9.0	10.6	
12.3	7.5	8.4	10.6	11.9	
14.3	8.6	8.8	12.1	12.3	
16.3	8.9	9.2	12.4	12.6	
18.3	9.3	9.5	12.8	13.0	
20.3	9.6	9.9	13.1	13.4	
22.3	10.0	10.3	13.5	13.8	
24.3	10.3	10.7	13.8	14.1	
26.3	10.7	11.0	14.2	14.5	
28.3	11.1	11.4	14.5	14.9	
30.3	11.4	11.8	14.9	15.3	
32.3	11.8	12.2	15.2	15.7	
34.3	12.1	12.6	15.6	16.0	
36.3	12.5	12.9	15.9	16.4	
38.3	12.8	13.3	16.3	16.8	
40.3	13.2	13.7	16.6	17.2	
42.3	13.5	14.1	17.0	17.5	
44.3	13.9	14.4	17.4	17.9	
46.3	14.2	14.8	17.7	18.3	
48.3	14.6	15.2	18.1	18.7	
50.3	14.9	15.6	18.4	19.1	
52.3	15.3	16.0	18.8	19.4	
54.3	15.6	16.3	19.1	19.8	
56.3	16.0	16.7	19.5	20.2	
58.3	16.3	17.1	19.8	20.6	
60.3	16.7	17.5	20.2	20.9	
62.3	17.0	17.8	20.5	21.3	
64.3	17.4	18.2	20.9	21.7	
66.3	17.7	18.6	21.2	22.1	
68.3	18.1	19.0	21.6	22.5	
70.3	18.5	19.4	21.9	22.8	

For the medium leg loads, the permissible load was distributed evenly across all legs. To determine the maximum leg loads, 80% of the permissible load was concentrated on one side of the scaffolding.

B3 Anchors, Anchor Forces

B3.1 Anchor Positions – Installation Heights

Table 2

Tower height [m]	Number of anchors	Stair tower with alternating staircase units – Anchor installation height [m]																
2 – 6	1	8 m anchor spacing	3															
8 – 14	2		3	11														
16 – 22	3		3	11	19													
24 – 30	4		3	11	19	27												
32 – 38	5		3	11	19	27	35											
Anchor forces [kN]	**A** $A_{\parallel}$ $A_{\perp}$ **B** $B_{\parallel}$ $B_{\perp}$ **C**		**3.5** 1.2 3.3 **3.8** 1.9 3.3 **1.9**	**5.1** 1.8 4.8 **5.5** 2.8 4.8 **2.7**	**5.6** 2.3 5.1 **5.9** 3.0 5.1 **3.0**	**5.9** 2.2 5.5 **6.3** 3.2 5.5 **3.2**	**6.1** 2.4 5.6 **6.5** 3.3 5.6 **3.3**											
								6 m anchor spacing										
40 – 46	9	4 m anchor spacing	3	7	11	15	19	25	31	37	43			**Anchor forces see B3.2**				
48 – 54	11		3	7	11	15	19	23	27	33	39	45	51					
56 – 62	13		3	7	11	15	19	23	27	31	35	41	47	53	59			
64 – 70	15		3	7	11	15	19	23	27	31	35	39	43	49	55	61	67	

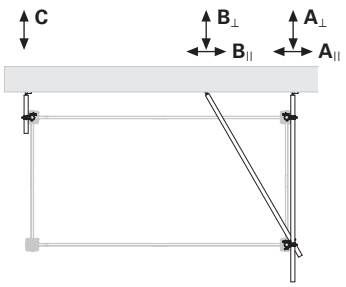

Tension and compression-proof anchorage
Anchor heights are measured without the length of jack extension.

Height until 38 m
Position the first anchor at 3.0 m, then at intervals of 8.0 m.

Height from 40 m
Position the first anchor at 3.0 m, then every 4.0 m in the lower area (marked in gey) and every 6.0 m above.

Top level
May be cantilevered to a maximum of 3.0 m!

Intermediate access on every 2nd storey
Install anchors continuously every 4.0 m.

Example: Stair Tower with a height of 32 – 38 m
– 32 m: last anchor at 31 m
– 34 m: last anchor at 33 m
– 36 m: last anchor at 35 m
– 38 m: last anchor at 35 m

B3 Anchors, Anchor Forces

B3.2 Anchor Forces

The anchor forces were calculated for an unclad stair tower in front of an open facade (60% opening).
A wind load with the following dynamic pressures has been taken into account for the scaffold's face areas:

Load combination – service condition
Constant dynamic pressure:
$q = 0.20\ kN/m^2$

Load combination – max. wind load
Dynamic pressure changing with height:
$q_1 = 0.86\ kN/m^2$ (at 0 m)
$q_2 = 1.10\ kN/m^2$ (at 24 m) and
$q_3 = 1.50\ kN/m^2$ (at 100 m)

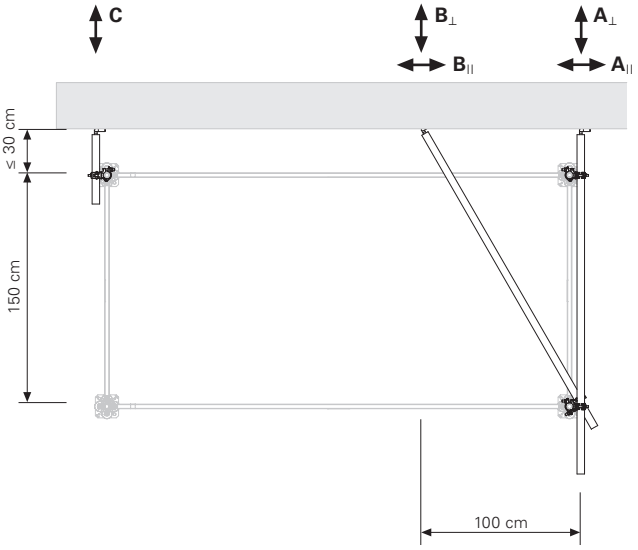

With Table 2:
Maximum anchor forces for 8 m spacing

Triangulated anchor:	A = 6.1 kN
is divided into:	$A_{\|\|}$ = 2.4 kN
	$A_{\perp}$ = 5.6 kN
	max. B = 6.5 kN
is divided into:	$B_{\|\|}$ = 3.3 kN
	$B_{\perp}$ = 5.6 kN
Short wall tie:	max. C = 3.3 kN

Maximum anchor forces for 6 m spacing

Triangulated anchor:	A = 5.3 kN
is divided into:	$A_{\|\|}$ = 2.1 kN
	$A_{\perp}$ = 4.8 kN
	max. B = 5.6 kN
is divided into:	$B_{\|\|}$ = 2.8 kN
	$B_{\perp}$ = 4.8 kN
Short wall tie:	max. C = 2.8 kN

Maximum anchor forces for 4 m spacing

Triangulated anchor:	A = 3.2 kN
is divided into:	$A_{\|\|}$ = 1.3 kN
	$A_{\perp}$ = 2.9 kN
	max. B = 3.4 kN
is divided into:	$B_{\|\|}$ = 1.7 kN
	$B_{\perp}$ = 2.9 kN
Short wall tie:	max. C = 1.7 kN

C Staircase units in the same direction

Stair tower with anchorage and access to the building

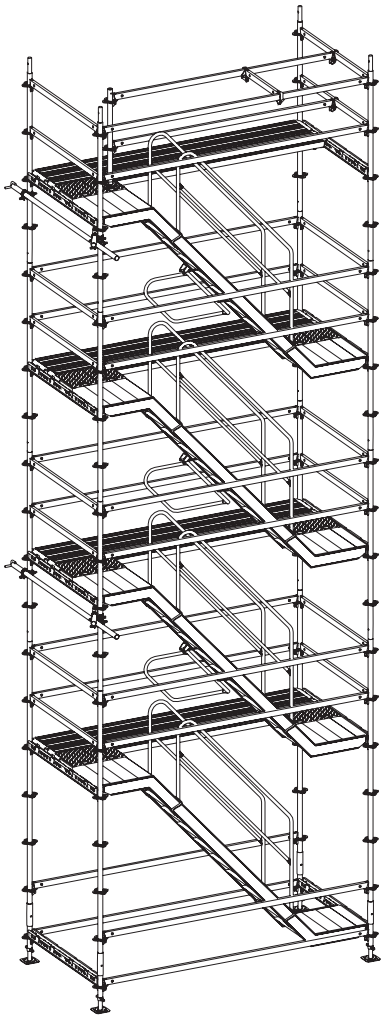

Stair Top Guardrail

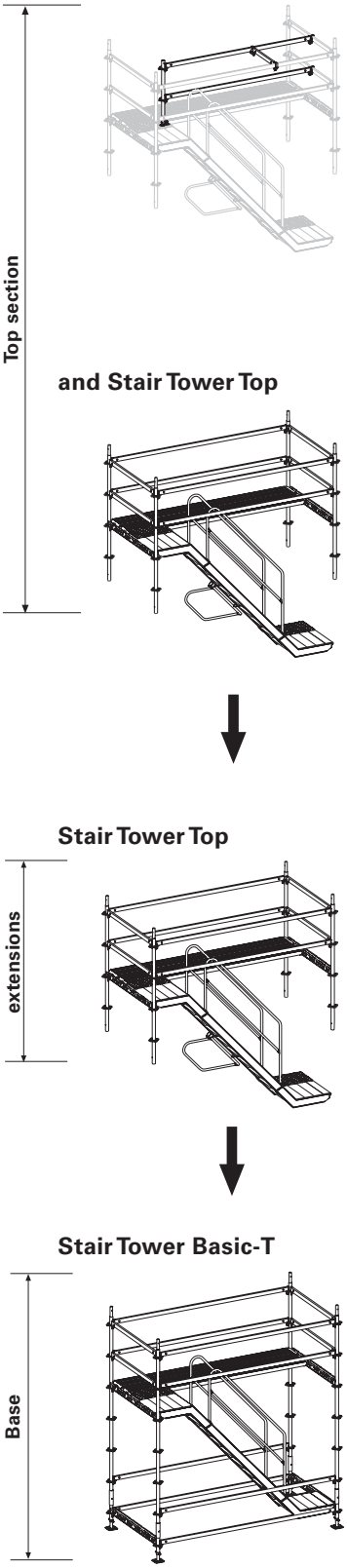

C1 Assembly Basic-T

Stair Tower Basic-T

The assembly sequence shown in the following sections can be complemented by other measures which are presented in Chapter E Working Safety during Assembly and Dismantling as well as assembly with the crane.

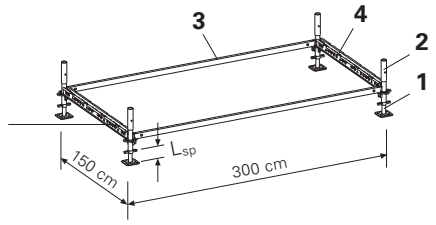

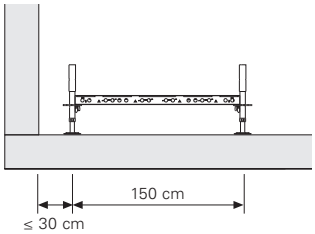

C1.1 Base level

1	Adjustable Base Plate UJB	4x
2	Base Standard UVB 24	4x
3	Ledger UH 300	2x
4	Decking Transom UHD 150	2x

Assembly
1. Assemble frame.
Distance to building ≤ 30 cm.
2. Horizontally align frame by adjusting the Adjustable Base Plates.
Spindle extension:
– for assembly heights up to 36 m: L_{sp} ≤ 30 cm,
– for assembly heights over 36 m: L_{sp} ≤ 20 cm.
3. Securely fix all the wedges on the transoms and ledgers using a 500 g hammer.

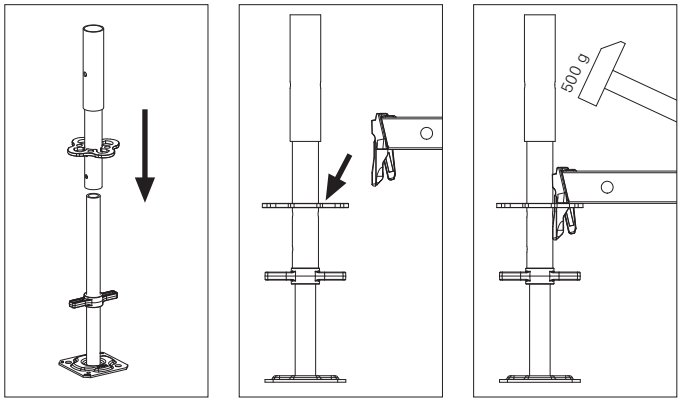

Install Base Standards and standards with holes lined up. This procedure allows that the Locking Pins can be always installed easily for crane use.

C1.2 Standards and Ledgers

5	Standard UVR 300	4x
3	Ledger UH 300	2x
4	Decking Transom UHD 150	2x

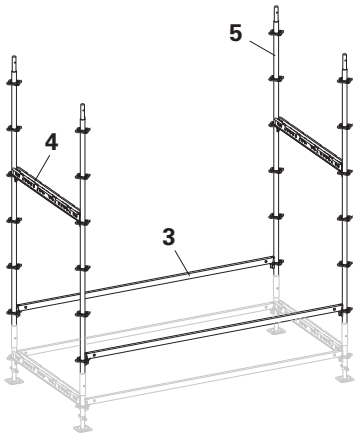

Assembly
1. Insert Standards UVR.
2. Attach Decking Transoms UHD 150 and secure with hammer blow.
3. Attach Ledgers UH 300 and secure wedges with hammer blow.

C1 Assembly Basic-T

C1.3 Staircase and Guardrail

6	Staircase UAS 300/200	1x
7	Stair Guardrail UAG	2x
3a	Ledger UH 150	4x
3	Ledger UH 300	4x
9	Steel Deck UDS 32 x 300	2x
8	Landing Link Panel UAB 30	2x

Assembly

1. Attach staircase UAS to Decking Transom UHD and push outwards until stop position is reached (= secured).
2. Install steel decks UDS and push outwards until stop position is reached (= secured).
3. Mount stair guardrails UAG in the position shown.
4. Install landing link panels UAB above between the landing and deck.
5. Attach ledgers UH on all sides as guardrail and secure with hammer blow.

For an easier and safer assembly process a steel deck UDS or scaffold planks can be installed on the base level.

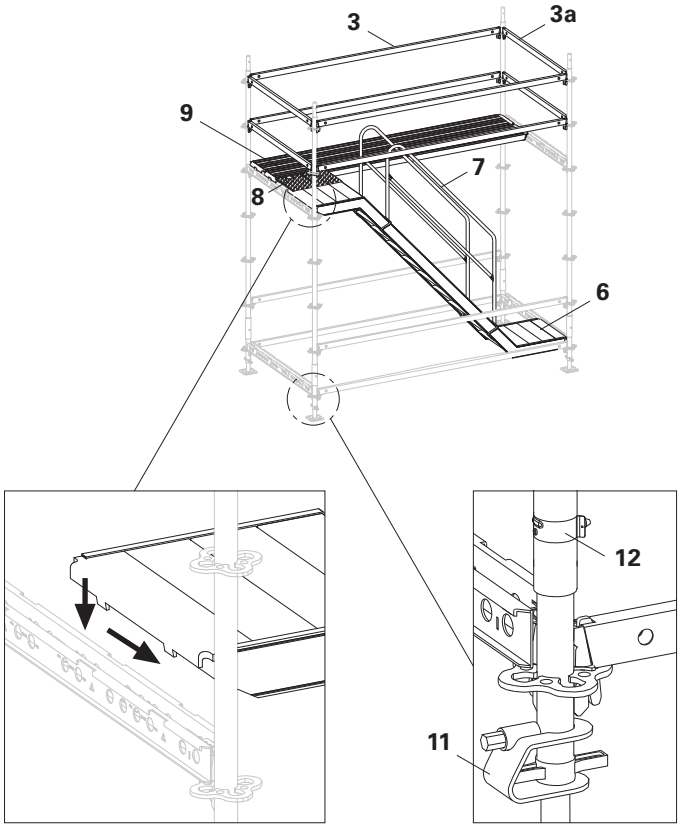

Moving by crane

11	Spindle Locking UJS	4x
12	Locking Pin Ø 48/57	4x

Assembly

1. Secure adjustable base plate UJB with spindle locking UJS.
2. Positively connect base standard UVB and standards UVR by means of locking pin.

C2 Assembly Extensions

Stair Tower Top

The number of extensions with Stair Tower Top depends on the height required and is repeated accordingly, see plan.

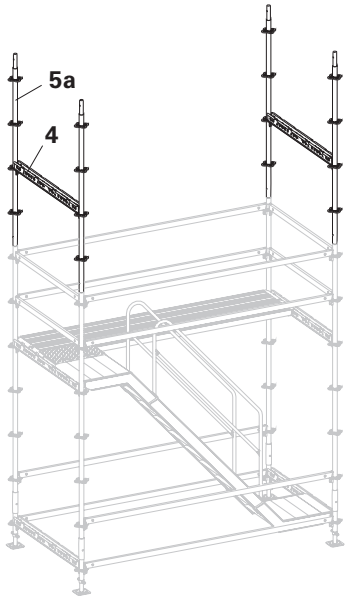

C2.1 Standards and Transoms

5a	Standard UVR 200	4x
4	Decking Transom UHD 150	2x

Assembly
1. Insert Standards UVR.
2. Mount Decking Transoms UHD and securely fix the wedges with hammer blow.
3. Progressively install anchoring, see C4.

C2.2 Staircase and Guardrails

6	Staircase UAS 300/200	1x
7	Stair Guardrail UAG	2x
7a	Stair Guardrail UAH	1x
9	Steel Deck UDS 32 x 300	2x
8	Landing Link Panel UAB 30	4x
3a	Ledger UH 150	4x
3	Ledger UH 300	4x

Assembly
1. Attach staircase UAS to Decking Transom UHD and push outwards until stop position is reached (= secured).
2. Install steel decks UDS and push outwards until stop position is reached (= secured).
3. Mount stair guardrails UAG in the position shown.
4. Install landing link panels UAB below between the landing and decks.
5. Attach stair guardrail UAH.
6. Install landing link panels UAB above between the landing and deck.
7. Attach ledgers UH on all sides as guardrail and secure wedges with hammer blow.

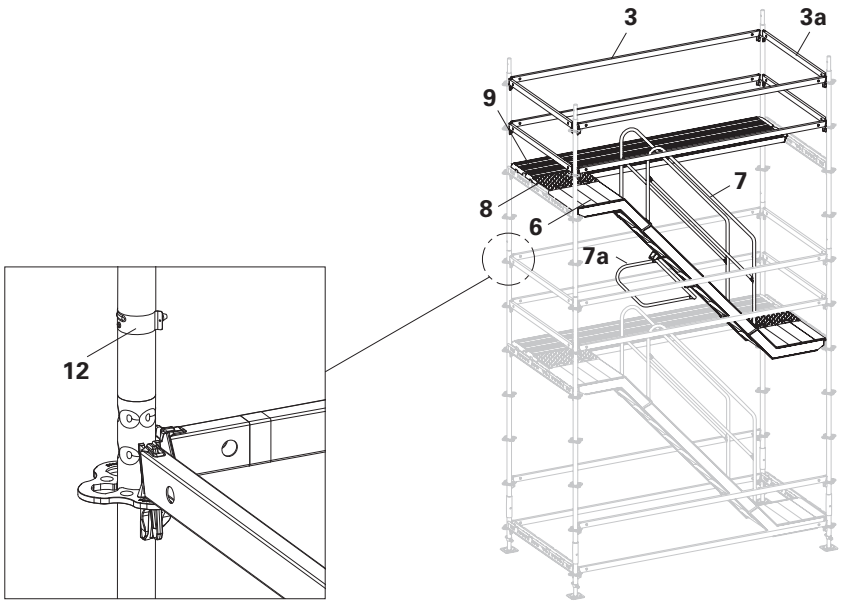

Moving by crane

12	Locking Pin Ø 48/57	4x

Assembly
Connect standards UVR with locking pin.

C3 Assembly Top Section

Stair Tower Top

C3.1 Standards and Transoms

5a	Standard UVR 200	4x
4	Decking Transom UHD 150	2x

Assembly
1. Insert Standards UVR.
2. Mount Decking Transoms UHD and securely fix the wedges with hammer blow.

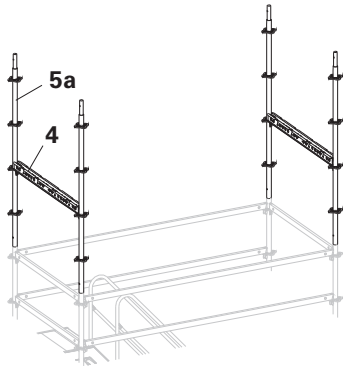

C3.2 Staircase and Guardrails

6	Staircase UAS 300/200	1x
7	Stair Guardrail UAG	2x
7a	Stair Guardrail UAH	1x
9	Steel Deck UDS 32 x 300	2x
8	Landing Link Panel UAB 30	4x
3a	Ledger UH 150	4x
3	Ledger UH 300	4x

Assembly
1. Attach staircase UAS to Decking Transom UHD and push outwards until stop position is reached (= secured).
2. Install steel decks UDS and push outwards until stop position is reached (= secured).
3. Mount stair guardrails UAG in the position shown.
4. Install landing link panels UAB below between the landing and decks.
5. Attach stair guardrail UAH.
6. Install landing link panels UAB above between the landing and deck.
7. Attach ledgers UH on all sides as guardrail and secure wedges with hammer blow.

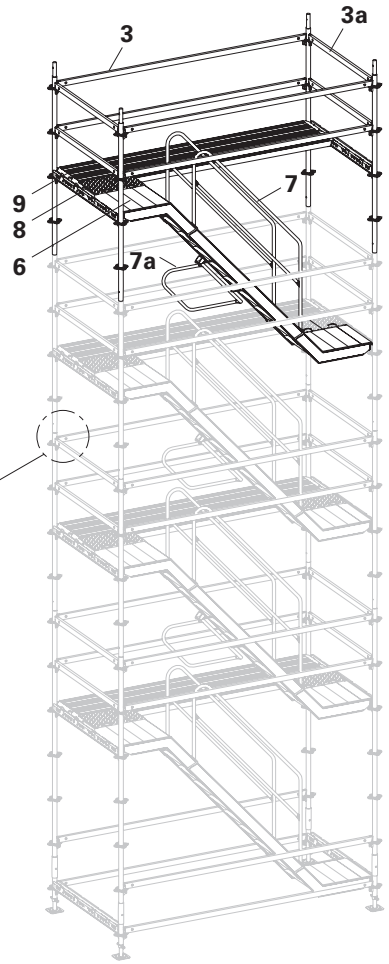

Moving by crane

12	Locking Pin Ø 48/57	4x

Assembly
Connect standards UVR with locking pin.

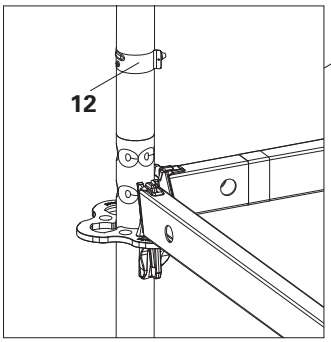

C3 Assembly Top Section

C3.3 Access to the Building

The Stair Tower Top receives an additional guardrail for safety for access to the building.

1	Adjustable Base Plate UJB	1x
5b	Top Standard UVH 100	1x
13	Ledger to Ledger Coupler UHA	4x
3b	Ledger UH 250	2x
3c	Ledger UH 75	1x

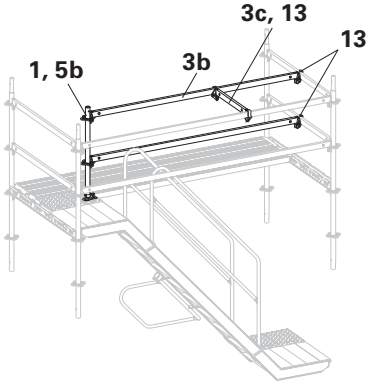

Assembly
1. Install ledger-to-ledger couplers UHA on the front elevation.
2. Place adjustable base plate UJB with top standard UVH on steel deck (2.50 m spacing).
3. Attach ledgers UH 250 to ledger-to-ledger coupler UHA and top standard UVH and secure with hammer blow.
4. Mount Ledger UH 75 with ledger-to-ledger coupler UHA between the guardrails (approx. middle of ledger UH 250).
5. Dismantle ledgers UH to give access to the building.

C3.4 Intermediate access points

are possible on every second floor.

Additionally components required:

14	Ledger Brace UBL 300/200 alternatively: Scaffold Tube 48.3 x 3.2 mm and Swivel Couplings DK 48/48

View of wall side

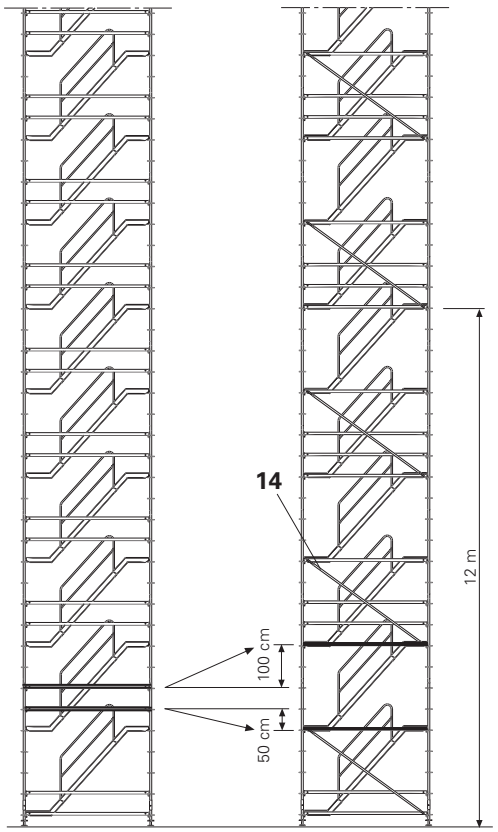

Measures on the wall side (inner):
- move the two Ledgers UH 300 up and down
- insert Ledger Braces UBL in the levels without access point
- assembly of anchors, see D3.1

Height from 56 m
- Install additional Ledger Braces UBL in the lower levels, see D3

C4 Anchorage / C5 Dismantling

Anchors do not carry vertical loads!

- Anchors should be installed progressively with the erection of the scaffolding.
- Fix with bolts M12, or equivalent connection.
- The load-bearing capacity of the connectors between the wall ties and the anchoring base must be proven for the anchor loads in the tables in D3.
- Install the first anchor at 4.0 m height. The position of the other anchors is given in the anchor patterns in the tables in D3.
- Each anchor position consists of a short anchor and a triangulated anchor.

C4.1 Short Anchor

10.1 Wall Tie UWT 45	1x
10.2 Swivel Coupling DK 48/48	1x

Assembly

1. Fix swivel coupling with Wall Tie UWT 45 to the inner leg.
2. Fix wall tie to the wall, e.g. with ring bolts M12 and dowels (or equivalent connection).

C4.2 Triangulated Anchor

10.3 Wall Tie UWT 220	2x
10.4 Standard Coupler NK 48/48	3x

Assembly

1. Fix the first Wall Tie UWT 220 with standard couplers to the inner and outer Standards UVR.
2. Fix the second Wall Tie UWT 220 with standard couplers to the outer Standard UVR.
3. Fix wall tie to the wall, e.g with ring bolts M12 and dowels (or equivalent connection).

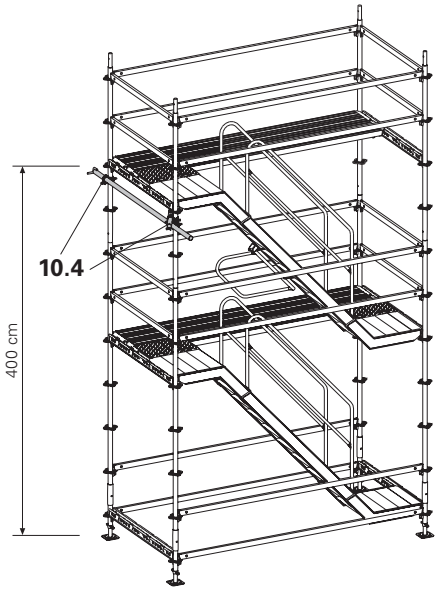

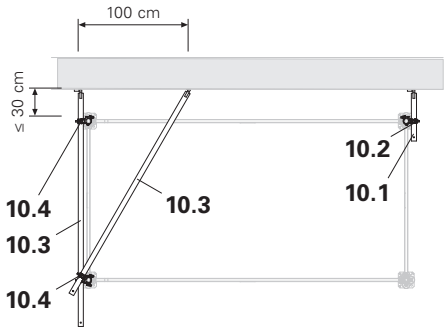

C5 Dismantling

- Dismantle in reverse order from top to bottom of the erection diagram.
- Remove the anchors progressively with the staircase from top to bottom.
- In the event of interrupted work the top level should not extend more than 2.0 m beyond the last anchor position.

D1 Live Loads

D1.1 Loads on Staircase UAS 250/200 and UAS 300/200

The permitted load for the flights of stairs is p = 2.0 kN/m²
(on landings and steps).

Staircase	UAS 250/200
or	UAS 300/200

p = 2,0 kN/m²

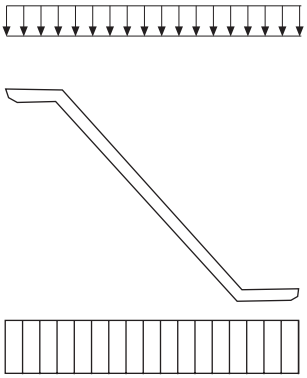

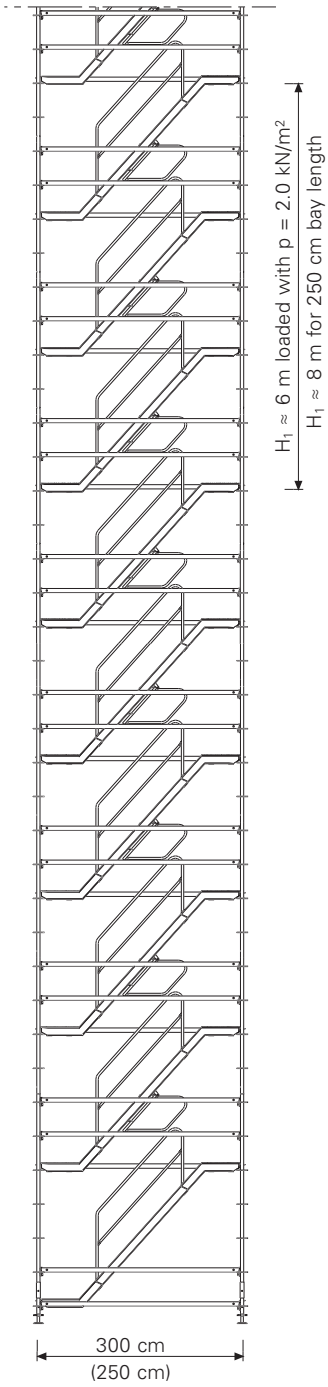

D1.2 Loads on Stair Towers

A stair tower consists of several flights of stairs, which are arranged above one another like a tower.

The permitted load of the stair tower is p = 2.0 kN/m² for a maximum length of 20 linear metres of stairway.

For stairs with a bay length of 3.0 m approx. 3 levels are loaded, for a bay lengths of 2.50 m it is approx. 4 levels.

D2 Reaction Forces

Reaction forces on the legs

The reaction forces for the stair towers are given in the table depending on overall height and bay length.

Table 3

	Foundation for complete tower		Foundation for individual standards		Stair Tower with staircase units in the same direction
Tower height	**medium leg loads**		**max. leg loads**		
[m]	Bay length 250 cm [kN]	Bay length 300 cm [kN]	Bay length 250 cm [kN]	Bay length 300 cm [kN]	
2.3	2.2	2.5	3.1	3.6	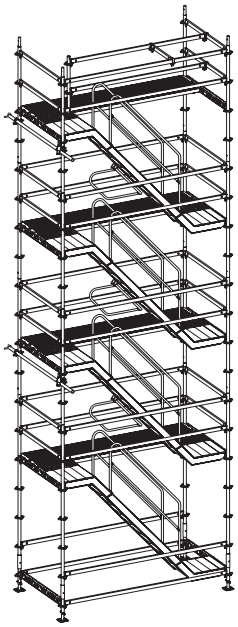
4.3	4.2	4.9	6.0	7.1	
6.3	6.2	7.3	9.0	10.6	
8.3	8.3	8.4	11.9	12.1	
10.3	8.8	8.9	12.4	12.6	
12.3	9.3	9.5	12.9	13.1	
14.3	9.8	10.0	13.4	13.7	
16.3	10.3	10.6	13.9	14.2	
18.3	10.8	11.1	14.4	14.8	
20.3	11.3	11.6	14.9	15.3	
22.3	11.8	12.2	15.4	15.8	
24.3	12.3	12.7	15.9	16.4	
26.3	12.8	13.2	16.4	16.9	
28.3	13.3	13.8	16.9	17.4	
30.3	13.8	14.3	17.4	18.0	
32.3	14.3	14.9	17.9	18.5	
34.3	14.8	15.4	18.4	19.1	
36.3	15.3	15.9	18.9	19.6	
38.3	15.8	16.5	19.4	20.1	
40.3	16.3	17.0	19.9	20.7	
42.3	16.8	17.5	20.4	21.2	
44.3	17.3	18.1	20.9	21.7	
46.3	17.8	18.6	21.4	22.3	
48.3	18.3	19.2	21.9	22.8	
50.3	18.8	19.7	22.4	23.4	
52.3	19.3	20.2	22.9	23.9	
54.3	19.8	20.8	23.4	24.4	
56.3	20.3	21.3	23.9	25.0	
58.3	20.8	21.8	24.4	25.5	
60.3	21.3	22.4	24.9	26.0	
62.3	21.8	22.9	25.4	26.6	
64.3	22.3	23.5	25.9	27.1	
66.3	22.8	24.0	26.4	27.7	
68.3	23.3	24.5	26.9	28.2	
70.3	23.8	25.1	27.4	28.7	

For the medium leg loads, the permissible load was distributed evenly across all legs. To determine the maximum leg loads, 80% of the permissible load was concentrated on one side of the scaffolding.

D3 Anchors, Anchor Forces

D3.1 Anchor Positions – Installation Heights

Table 4

Tower height [m]	Number of anchors	Stair Tower with staircase units in the same direction – Anchor installation height [m]															
2 – 6	1	8 m anchor spacing	4														
8 – 14	2		4	–	–	12											
16 – 22	3		4	–	–	12	20										
24 – 30	5		–	4*	8	12	20	28									
32 – 38	6		–	4*	8	12	20	28	36								
Anchor forces [kN]	**A** $A_{\parallel}$ $A_{\perp}$ **B** $B_{\parallel}$ $B_{\perp}$ **C**		**6.1** 1.6 5.9 **6.8** 3.4 5.9 **2.9**	**3.2** 1.0 3.0 **3.5** 1.8 3.0 **1.5**	**4.8** 1.4 4.6 **5.3** 2.7 4.6 **2.3**	**6.7** 2.0 6.4 **7.4** 3.7 6.4 **3.1**	**7.2** 2.2 6.9 **8.0** 4.1 6.9 **3.4**	**7.6** 2.2 7.3 **8.4** 4.2 7.3 **3.6**	**7.9** 2.4 7.5 **8.7** 4.4 7.5 **3.7**								
								6 m anchor spacing									
40 – 46	9	4 m anchor spacing	4	8	12	16	20	26	32	38	44	**Anchor forces see D3.2**					
48 – 54	11		4	8	12	16	20	24	28	34	40	46	52				
56 – 62	13		(4)	(8)	12	16	20	24	28	32	36	42	48	54	60		
64 – 70	15		(4)	(8)	(12)	16	20	24	28	32	36	40	44	50	56	62	68

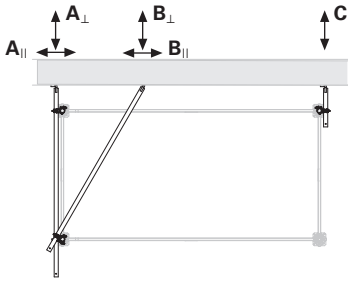

*4 m anchor spacing

(4) (8) (12) **Ledger Braces UBL are required on the inside and outside of the long sides.**

Tension and compression-proof anchorage
Anchor heights are measured without the length of jack extension.

Height until 38 m
Install the first anchor at 4.0 m and then at intervals of 8.0 m.
Partial intermediate anchores at 8.0 m height are required.

Height from 40 m
Install the first anchor at 4.0 m and then every 4.0 m in the lower area (area marked in grey), every 6.0 m above.

Height from 56 m
Ledger Braces UBL (or Scaffold Tubes 48.3 x 3.2 and Swivel Couplings DK 48/48) are required on the lower levels on the long sides inside and outside:
Height from 56 – 60 m: level 1 and 2
Height from 62 – 64 m: level 1 to 4
Height from 66 – 70 m: level 1 to 6

Top level
May be cantilevered to a maximum of 2.0 m!

Intermediate access on every 2nd storey
Install anchors progressively every 4.0 m; braces are required on the lower levels as for towers from 56 m height.

Example: Stair Tower with a height of 32 – 38 m
– 32 m: last anchor at 32 m
– 34 m: last anchor at 34 m
– 36 m: last anchor at 36 m
– 38 m: last anchor at 36 m

D3 Anchors, Anchor Forces

D3.2 Anchor Forces

The anchor forces were calculated for an unclad stair tower in front of an open facade (60% opening).
A wind load with the following dynamic pressures has been taken into account for the scaffold's face areas:

Load combination – service condition
Constant dynamic pressure:
$q = 0.20\ kN/m^2$

Load combination – max. wind load
Dynamic pressure changing with height:
$q_1 = 0.86\ kN/m^2$ (at 0 m)
$q_2 = 1.10\ kN/m^2$ (at 24 m) and
$q_3 = 1.50\ kN/m^2$ (at 100 m)

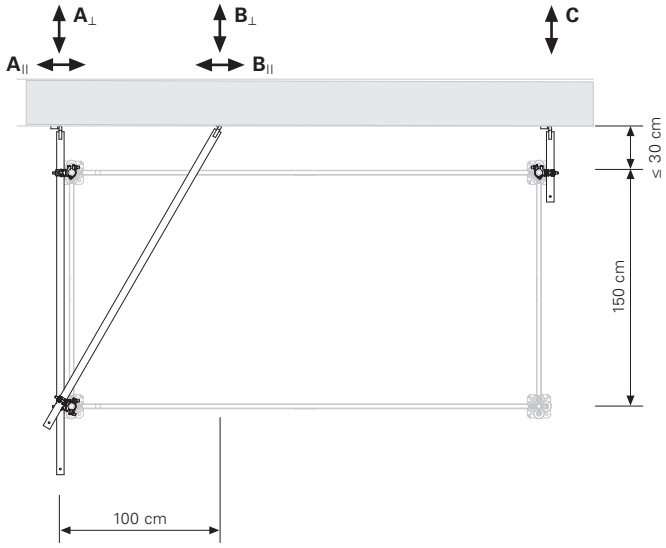

With Table 4:
Maximum anchor forces for 8 m spacing

Triangulated anchor:	A = 7.9 kN
is divided into:	$A_{\parallel}$ = 2.4 kN
	$A_{\perp}$ = 7.5 kN
	max. B = 8.7 kN.
is divided into:	$B_{\parallel}$ = 4.4 kN
	$B_{\perp}$ = 7.5 kN
Short wall tie:	max. C = 3.7 kN

Maximum anchor forces for 6 m spacing

Triangulated anchor:	max. A = 6.8 kN
is divided into:	$A_{\parallel}$ = 2.0 kN
	$A_{\perp}$ = 6.5 kN
	max. B = 7.5 kN
is divided into:	$B_{\parallel}$ = 3.8 kN
	$B_{\perp}$ = 6.5 kN
Short wall tie:	max. C = 3.2 kN

Maximum anchor forces for 4 m spacing

Triangulated anchor:	max. A = 4.1 kN
is divided into:	$A_{\parallel}$ = 1.3 kN
	$A_{\perp}$ = 3.9 kN
	max. B = 4.5 kN
is divided into:	$B_{\parallel}$ = 2.3 kN
	$B_{\perp}$ = 3.9 kN
Short wall tie:	max. C = 1.9 kN

Safety at work
E1 Assembly and Dismantling

Suggestion for assembly with alternating staircase unit

Following the completion of his own risk assessment, the scaffold contractor can also take other measures.

Additionally components required:

15	Industrial Deck UDI 25 x 150	8x
16	Scaffold board	4x

Assembly sequence:
1. Install working platform at a height of 2 m using Industrial Decks UDI 25 x 150 (4 pieces) and create access to the landing by means of scaffold planks.
2. The next scaffold level along with the next Stair Tower UAS are installed with personnel positioned on the working platform.
3. Install second working platform one level higher using existing Ledgers UH and Industrial Decks UDI, and create an access point by means of scaffold planks.

Repeat points 2 and 3.

Dismantling sequence:
1. Dismantle guardrails of the top level.
2. Install Ledgers UH 300 at the height of the bottom stair landing.
3. Install working platform using Industrial Decks UDI 25 x 150 (4 pieces) and create access to the landing by means of scaffold planks.
4. Install second working platform one level lower using existing Ledgers UH and Industrial Decks UDI, and create an access point by means of scaffold planks.
5. Dismantle the top scaffold level and Stair Tower UAS section with personnel positioned on the working platform.
6. Install top working platform two levels lower. After this, dismantle the top scaffold level and Stair Tower UAS section again. Repeat this procedure until the complete stair tower has been dismantled.

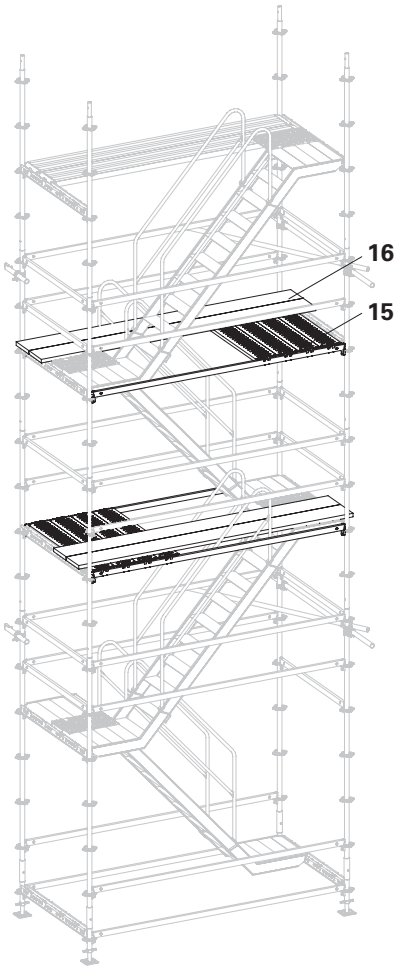

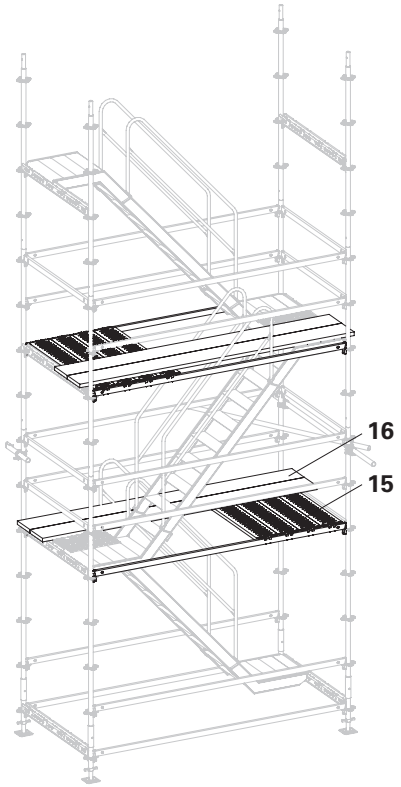

E2 Crane Unit

Suggestion for assembly with alternating staircase units

The lower Staircase UAS must be installed 150 cm higher for moving.

Additionally components required:

4	Decking Transom UHD	2x

Assembly

1. At 2nd Rosette above base level attach Decking Transom UHD on the left.
2. At 6th Rosette above base level attach Decking Transom UHD on the right.
3. Attach Staircase UAS to Decking Transom UHD and push outwards until stop position is reached (= secured).
4. Mount stair guardrails UAG in the position shown.
5. Attach crane lifting gear (4 sling textile straps) to the standards.
6. Check locking pins of standards, complete if necessary (tension proof connection).
7. Move entire scaffold unit with a crane.

Modification after moving

- Move the lower stair downwards.
- Install landing links UAB at top and bottom.
- Remove Decking Transoms UHD not required.

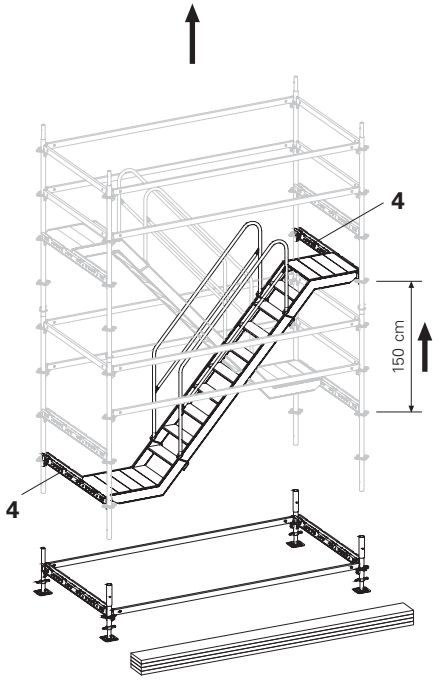

Item no.	Weight kg		
116762	2,780	**Adj. Base Plate UJB 38-36/17**	**Note** With captive white Quick Jack Nut.

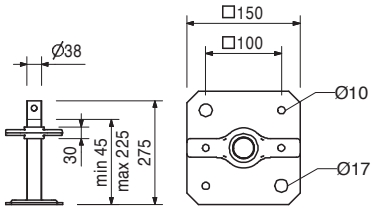

100411	3,330	**Adj. Base Plate UJB 38-50/30**	**Note** With captive red Quick Jack Nut.

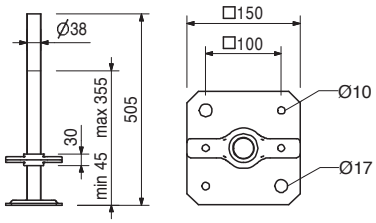

100242	4,520	**Adj. Base Plate UJB 38-80/55**	**Note** With captive yellow Quick Jack Nut.

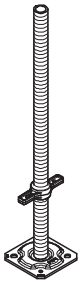

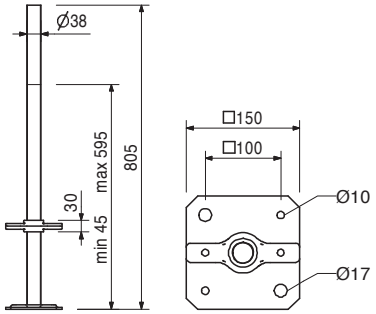

100159	4,860	**Adj. Base Plate UJS 38-80/50 Swivel**	**Note** With captive yellow Quick Jack Nut.

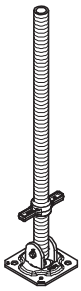

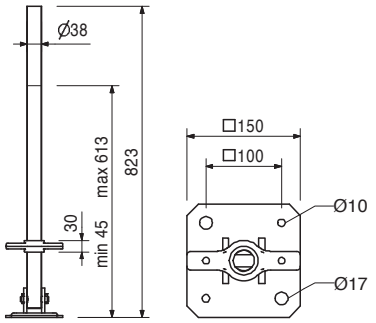

Item no.	Weight kg	
100244	1,230	**Base Plate UJP** Without height adjustment.

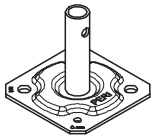

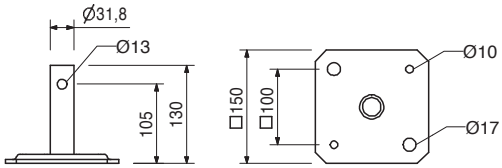

100863	1,030	**Spindle Locking UJS** Secures the adjustable base plates Ø 38 mm in the leg when moving.

Note
Wrench size SW 19.

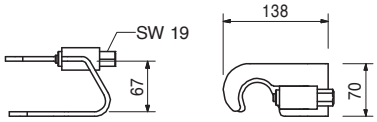

100014	2,470	**Base Standard UVB 24** For assembly directly on the base spindle.

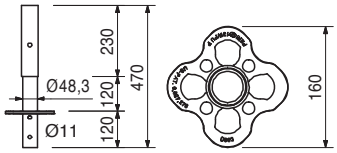

117194	3,980	**Base Standard UVB 49** For assembly directly on the base spindle. Reduces necessary spindle extension lengths through distance between rosettes of 25 cm.

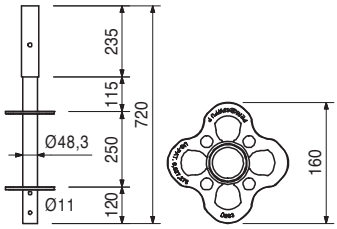

Item no.	Weight kg	Standards UVR	L
102859	3,080	**Standard UVR 50**	500
101306	5,380	**Standard UVR 100**	1000
102860	7,690	**Standard UVR 150**	1500
100009	9,990	**Standard UVR 200**	2000
100012	14,700	**Standard UVR 300**	3000
100013	19,200	**Standard UVR 400**	4000

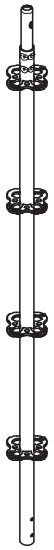

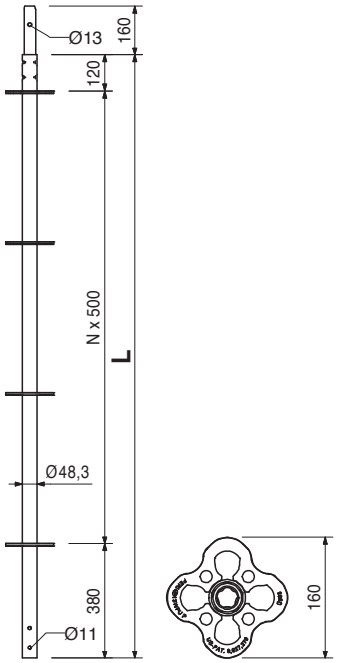

		Top Standards UVH	L
101309	2,510	**Top Standard UVH 50**	500
100000	4,610	**Top Standard UVH 100**	1000
100003	6,920	**Top Standard UVH 150**	1500
100005	9,230	**Top Standard UVH 200**	2000
100007	11,500	**Top Standard UVH 250**	2500

Without spigot for supporting head spindles.

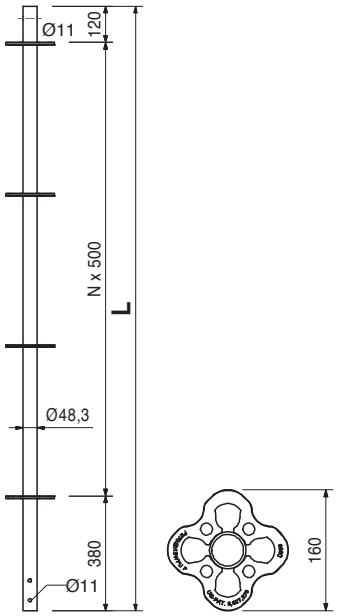

Item no.	Weight kg	
117195	7,590	**Top Standard UVH 125** Without spigot for supporting head spindles. Reduces necessary spindle extension lengths through distance between rosettes of 25 cm.

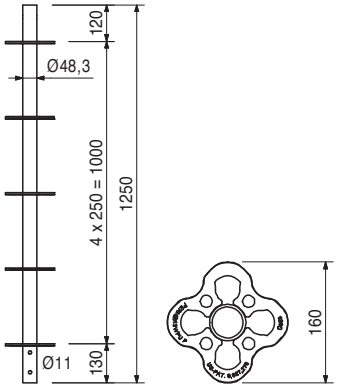

111053	0,059	**Locking Pin Ø 48/57** As tension-proof connection of standards with a diameter of 48 up to 57 mm.

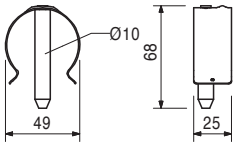

			L	X
		Decking Transoms UHD		
100031	4,220	**Decking Transom UHD 72**	675	720
100039	5,770	**Decking Transom UHD 104**	995	1040
100076	8,260	**Decking Transom UHD 150**	1455	1500
100079	11,600	**Decking Transom UHD 200**	1955	2000
100082	13,900	**Decking Transom UHD 250**	2455	2500
100085	16,300	**Decking Transom UHD 300**	2955	3000

For mounting the Steel Decks UDS.

Note
Consider load-bearing capacity in connection with decking length. With hook for bracket brace.

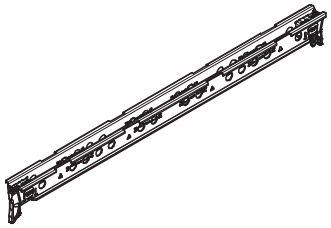

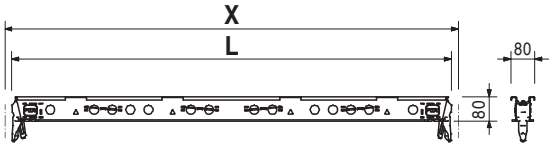

Accessories

100401	7,620	**Bracket Brace UCP 72/104**

Item no.	Weight kg	Ledgers UH	L	X	Sticker
100440	2,630	**Ledger UH 72**	674	720	
100192	3,480	**Ledger UH 104**	994	1040	
100021	4,690	**Ledger UH 150**	1454	1500	
100023	6,020	**Ledger UH 200**	1954	2000	White
100025	7,340	**Ledger UH 250**	2454	2500	Red
100027	8,670	**Ledger UH 300**	2954	3000	Black
100029	11,300	**Ledger UH 400**	3954	4000	

Note
Longitudinally-stamped with coloured label for easier identification.
Only available as rentable item.

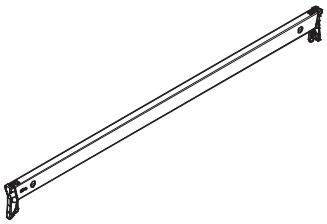

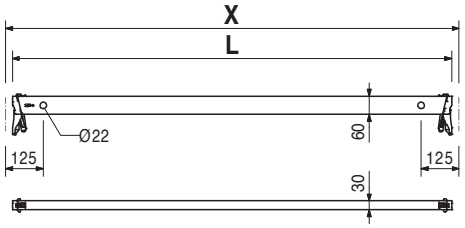

		Ledgers UH Plus	L	X	Sticker
114124	2,670	**Ledger UH 72 Plus**	674	720	
114635	3,510	**Ledger UH 104 Plus**	994	1040	
114641	4,730	**Ledger UH 150 Plus**	1454	1500	
114645	6,060	**Ledger UH 200 Plus**	1954	2000	White
114648	7,380	**Ledger UH 250 Plus**	2454	2500	Red
114651	8,700	**Ledger UH 300 Plus**	2954	3000	Black
114654	11,300	**Ledger UH 400 Plus**	3954	4000	

Note
Longitudinally-stamped with coloured label for easier identification.

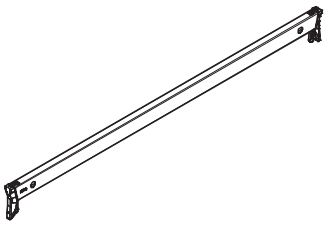

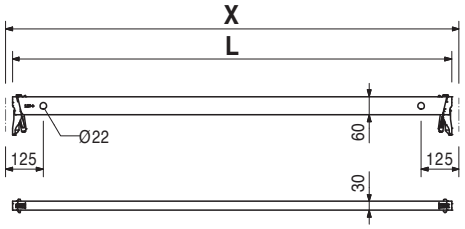

Item no.	Weight kg	Ledger Braces UBL	L	X	Y	Sticker
106613	3,620	**Ledger Brace UBL 104/100**	1274	1040	1000	
107867	3,800	**Ledger Brace UBL 150/50**	1347	1500	500	
100055	4,450	**Ledger Brace UBL 150/100**	1601	1500	1000	
102846	5,350	**Ledger Brace UBL 150/150**	1953	1500	1500	
100057	6,390	**Ledger Brace UBL 150/200**	2358	1500	2000	
104391	5,010	**Ledger Brace UBL 200/50**	1820	2000	500	
100059	5,510	**Ledger Brace UBL 200/100**	2016	2000	1000	
102862	6,250	**Ledger Brace UBL 200/150**	2305	2000	1500	
100063	6,650	**Ledger Brace UBL 250/100**	2462	2500	1000	
100061	7,160	**Ledger Brace UBL 200/200**	2658	2000	2000	White
102861	7,270	**Ledger Brace UBL 250/150**	2705	2500	1500	
100065	8,050	**Ledger Brace UBL 250/200**	3010	2500	2000	Red
104762	7,500	**Ledger Brace UBL 300/50**	2795	3000	500	
100067	7,840	**Ledger Brace UBL 300/100**	2926	3000	1000	
104766	8,370	**Ledger Brace UBL 300/150**	3133	3000	1500	
100069	9,050	**Ledger Brace UBL 300/200**	3400	3000	2000	Black

Attach using holes in the ledgers.

Note

Longitudinally-stamped with coloured label for easier identification.
UBL 150/250 identical to UBL 300/50,
UBL 250/50 identical to UBL 200/150,
UBL 100/100 identical to Diagonal Strut ST 100 (Item no. 019940).

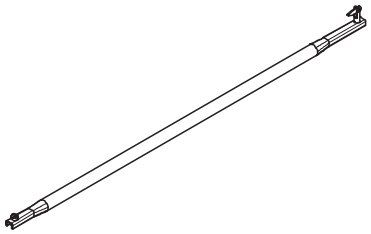

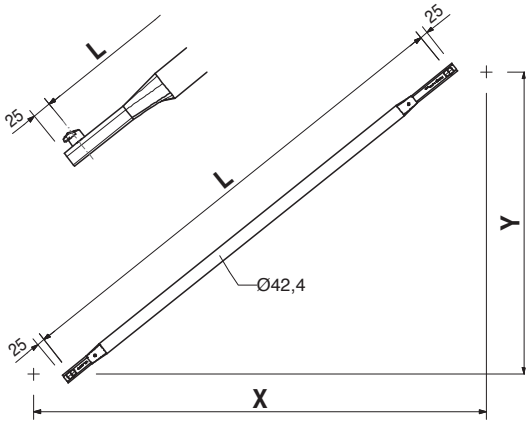

Item no.	Weight kg	Node Braces UBK	L	X	Y	Sticker
106969	4,370	**Node Brace UBK 72/100**	1285	720	1000	
100969	6,750	**Node Brace UBK 72/200**	2179	720	2000	
100977	4,850	**Node Brace UBK 104/100**	1472	1040	1000	
100840	7,030	**Node Brace UBK 104/200**	2301	1040	2000	
112926	6,990	**Node Brace UBK 100/200**	2285	1000	2000	
112765	7,260	**Node Brace UBK 125/200**	2401	1250	2000	
100981	5,710	**Node Brace UBK 150/100**	1821	1500	1000	
100973	6,580	**Node Brace UBK 150/150**	2152	1500	1500	
100572	7,600	**Node Brace UBK 150/200**	2539	1500	2000	
100985	6,790	**Node Brace UBK 200/100**	2246	2000	1000	
106630	7,510	**Node Brace UBK 200/150**	2521	2000	1500	
100573	8,390	**Node Brace UBK 200/200**	2860	2000	2000	White
100989	7,940	**Node Brace UBK 250/100**	2696	2500	1000	
106624	8,540	**Node Brace UBK 250/150**	2930	2500	1500	
100574	9,310	**Node Brace UBK 250/200**	3226	2500	2000	Red
100993	9,130	**Node Brace UBK 300/100**	3131	3000	1000	
100575	10,300	**Node Brace UBK 300/200**	3625	3000	2000	Black

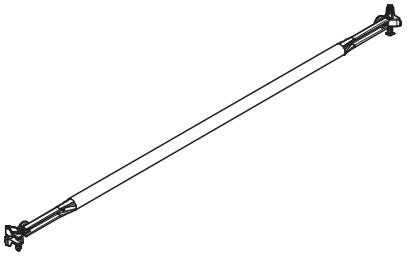

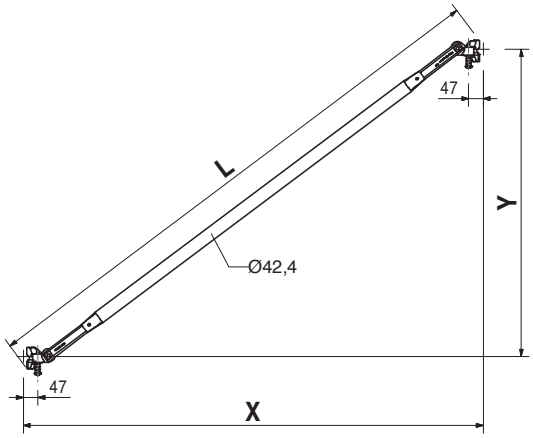

		Horizontal Braces UBH	L	X	Y
100042	7,350	**Horizontal Brace UBH 150/150**	2042	1500	1500
107815	8,700	**Horizontal Brace UBH 200/150**	2422	2000	1500
100047	9,870	**Horizontal Brace UBH 200/200**	2749	2000	2000
106931	10,200	**Horizontal Brace UBH 250/150**	2839	2500	1500
104356	11,300	**Horizontal Brace UBH 250/200**	3123	2500	2000
100049	12,400	**Horizontal Brace UBH 250/250**	3456	2500	2500
100051	11,800	**Horizontal Brace UBH 300/150**	3279	3000	1500
123483	12,700	**Horizontal Brace UBH 300/200**	3528	3000	2000
102617	13,800	**Horizontal Brace UBH 300/250**	3826	3000	2500
100053	15,000	**Horizontal Brace UBH 300/300**	4164	3000	3000

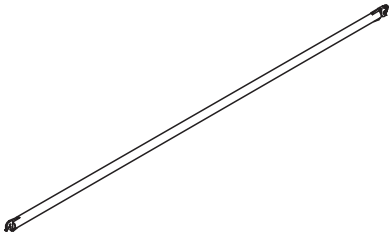

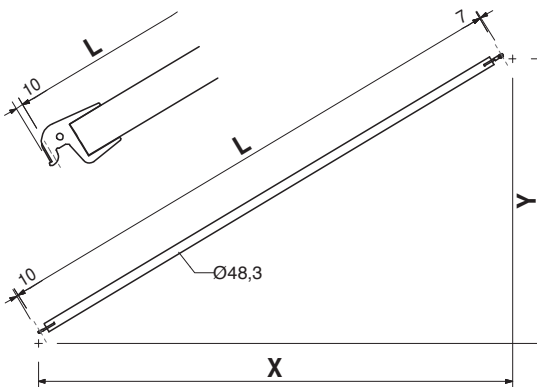

Item no.	Weight kg	H-Braces UBH Flex	L	X	Y
114818	4,580	**H-Brace UBH Flex 100/100**	1335	1000	1000
114904	5,620	**H-Brace UBH Flex 125/125**	1689	1250	1250
114821	5,720	**H-Brace UBH Flex 150/100**	1725	1500	1000
114908	6,160	**H-Brace UBH Flex 150/125**	1874	1500	1250
114912	6,650	**H-Brace UBH Flex 150/150**	2042	1500	1500
114820	7,000	**H-Brace UBH Flex 200/100**	2161	2000	1000
124097	7,770	**H-Brace UBH Flex 200/150**	2422	2000	1500
114916	8,730	**H-Brace UBH Flex 200/200**	2749	2000	2000
114896	8,120	**H-Brace UBH Flex 250/75**	2541	2500	750
114819	8,350	**H-Brace UBH Flex 250/100**	2620	2500	1000
114996	8,640	**H-Brace UBH Flex 250/125**	2720	2500	1250
124101	8,990	**H-Brace UBH Flex 250/150**	2838	2500	1500
114920	9,830	**H-Brace UBH Flex 250/200**	3123	2500	2000
114928	10,800	**H-Brace UBH Flex 250/250**	3456	2500	2500
114900	9,540	**H-Brace UBH Flex 300/75**	3025	3000	750
114892	9,730	**H-Brace UBH Flex 300/100**	3092	3000	1000
124105	10,300	**H-Brace UBH Flex 300/150**	3279	3000	1500
114924	11,000	**H-Brace UBH Flex 300/200**	3528	3000	2000
114932	11,900	**H-Brace UBH Flex 300/250**	3826	3000	2500
114936	12,900	**H-Brace UBH Flex 300/300**	4163	3000	3000

For horizontal bracing of towers. Useable also underneath the decking.

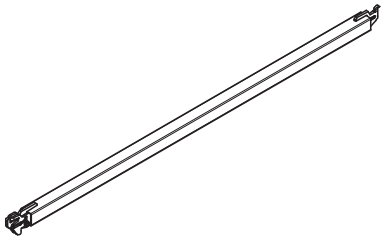

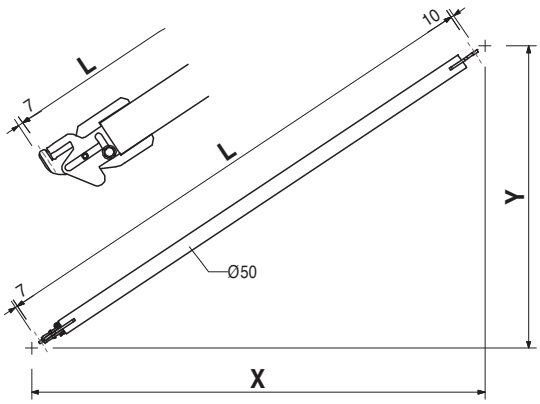

		Shoring Braces UBS	L	X	Y
107801	5,260	**Shoring Brace UBS 150/100**	1792	1500	1000
107810	6,050	**Shoring Brace UBS 150/150**	2122	1500	1500
115504	6,360	**Shoring Brace UBS 200/100**	2219	2000	1000
115291	7,050	**Shoring Brace UBS 200/150**	2492	2000	1500

Standard diagonal for shoring frames.

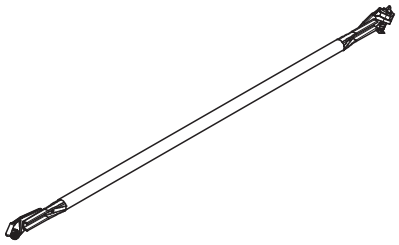

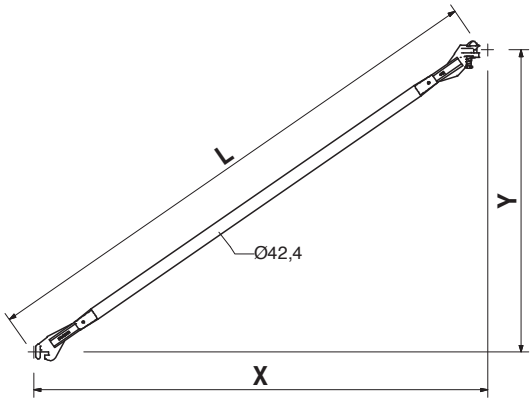

Item no.	Weight kg	
		Steel Decks UDS
100488	5,200	**Steel Deck UDS 32 x 72**
100486	7,060	**Steel Deck UDS 32 x 104**
100355	11,200	**Steel Deck UDS 32 x 150**
100373	14,100	**Steel Deck UDS 32 x 200**
100375	17,000	**Steel Deck UDS 32 x 250**
100377	19,900	**Steel Deck UDS 32 x 300**
100820	25,900	**Steel Deck UDS 32 x 400**

X	perm. p [kN/m²]	max. p [kN/m²]
720	6.0	25.0
1040	6.0	25.0
1500	6.0	25.0
2000	6.0	18.1
2500	6.0	11.4
3000	4.5	7.9
4000	2.0	4.4

Note
perm. p according to DIN EN 12811-1.
max. p = maximum possible load without deflection limitation.

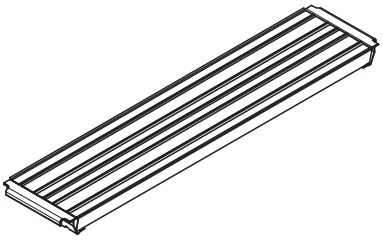

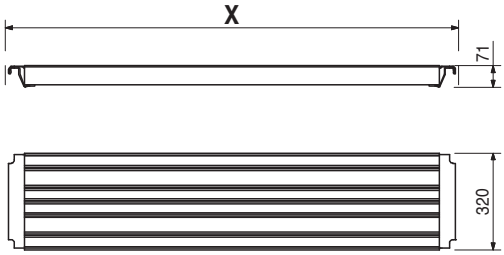

102605	0,420	**Deck Link Plate UED**

For linking adjacent UDS decks.

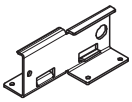

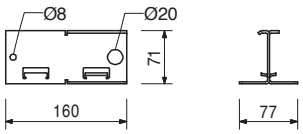

114811	18,200	**Access Deck UAL-2, 64 x 200/3**

Technical Data
Load Class 3, 2.0 kN/m².

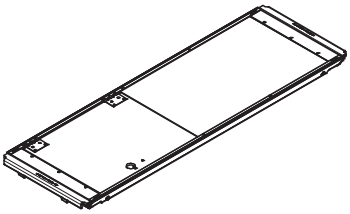

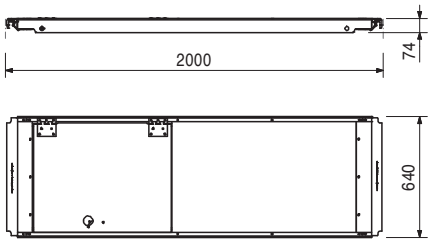

Accessories

103607	3,450	**Ladder UEL w. Hook**

Item no.	Weight kg	
		Access Decks with Ladder UAL-2
114825	25,300	**Access Deck w. Ladder UAL-2, 64 x 250/3**
114812	28,700	**Access Deck w. Ladder UAL-2, 64 x 300/3**

Technical Data
Load Class 3, 2.0 kN/m².

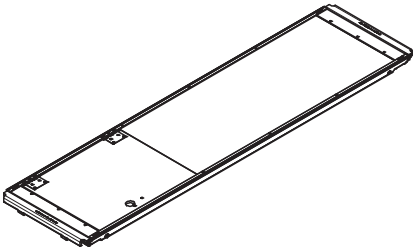

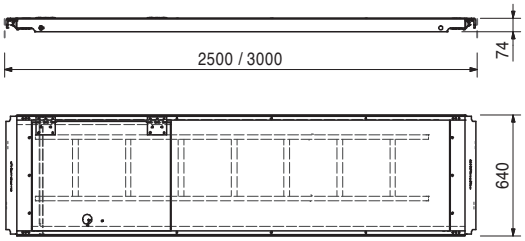

103607	3,450	**Ladder UEL w. Hook**

For attaching to Access Deck UAL without ladder or Access Deck UAL with ladder.

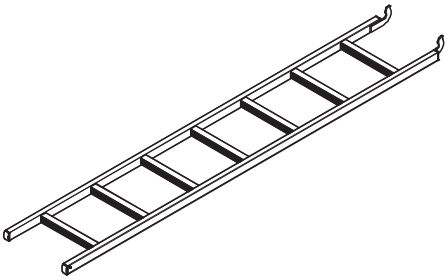

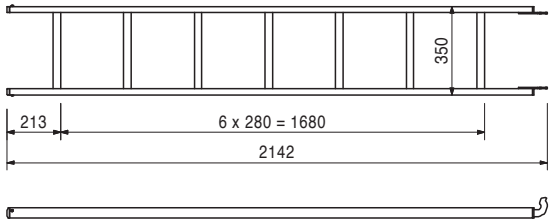

		Decking Gap Fillers UD	**L**	**X**
101360	2,160	**Decking Gap Filler UD 7/150**	1486	1500
101372	2,780	**Decking Gap Filler UD 7/200**	1986	2000
101373	3,400	**Decking Gap Filler UD 7/250**	2486	2500
101375	4,020	**Decking Gap Filler UD 7/300**	2986	3000
101394	2,800	**Decking Gap Filler UD 11/150**	1486	1500
101378	3,620	**Decking Gap Filler UD 11/200**	1986	2000
101379	4,440	**Decking Gap Filler UD 11/250**	2486	2500
101381	5,260	**Decking Gap Filler UD 11/300**	2986	3000

For covering gaps between 7 cm and 25 cm.

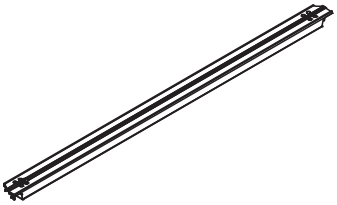

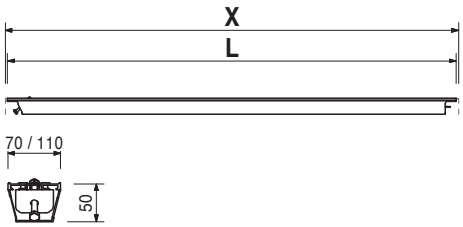

Item no.	Weight kg	
		Board Transoms UHL
101588	2,300	**Board Transom UHL 72**
101591	3,160	**Board Transom UHL 104**

Provides additional support for scaffold boards.
Mounted on the Ledger UH.

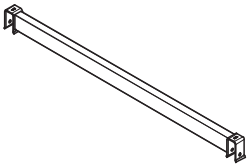

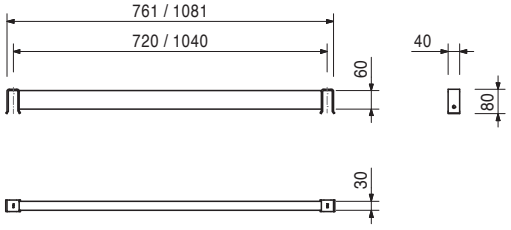

		Toeboards Wood UPT-2	**L**	**X**
108068	4,090	**Toeboard Wood UPT-2 150**	1536	1500
108114	5,160	**Toeboard Wood UPT-2 200**	2036	2000
108117	6,230	**Toeboard Wood UPT-2 250**	2536	2500
108120	7,300	**Toeboard Wood UPT-2 300**	3036	3000
108204	9,430	**Toeboard Wood UPT-2 400**	4036	4000

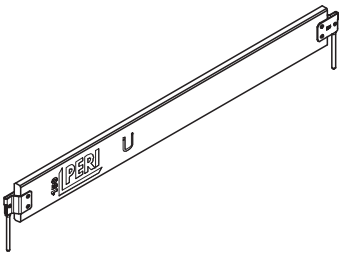

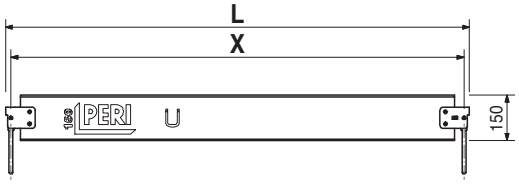

		Toeboards Steel UPY	**L**	**X**
110213	0,927	**Toeboard Steel UPY 50**	486	500
110526	1,380	**Toeboard Steel UPY 72**	706	720
110514	1,440	**Toeboard Steel UPY 75**	736	750
110073	1,960	**Toeboard Steel UPY 100**	986	1000
110076	2,040	**Toeboard Steel UPY 104**	1016	1040
110160	3,000	**Toeboard Steel UPY 150**	1486	1500
110176	4,030	**Toeboard Steel UPY 200**	1986	2000
110208	5,060	**Toeboard Steel UPY 250**	2486	2500
110211	6,100	**Toeboard Steel UPY 300**	2986	3000

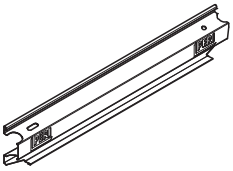

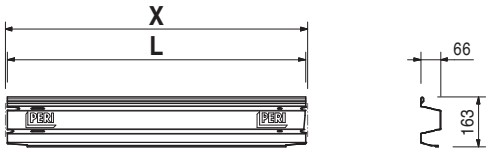

Item no.	Weight kg		
		End Guardrails UPX	**Note**
101579	3,910	**End Guardrail UPX 32**	With integrated toeboard.
100444	7,150	**End Guardrail UPX 72**	
100349	9,420	**End Guardrail UPX 104**	

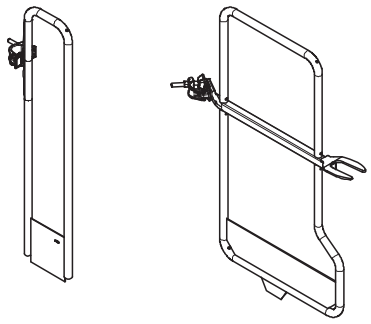

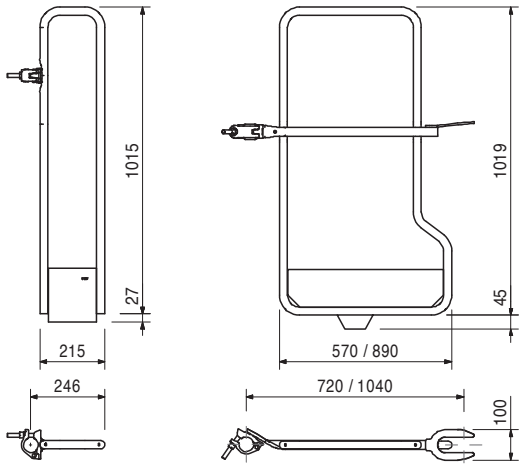

		End Guardrails in Advance UPA	**Note**
104618	10,000	**End Guardrail in Advance UPA 72**	With integrated toeboard.
101799	12,000	**End Guardrail in Advance UPA 104**	

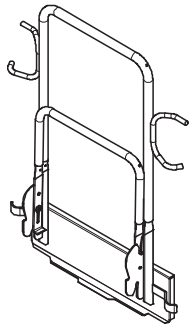

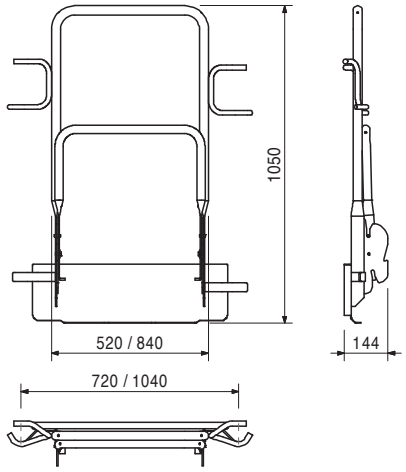

100235	5,010	**Console Bracket UCB 32**

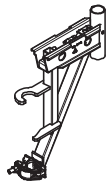

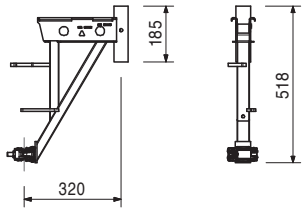

		Accessories
100478	0,110	**Locking Pin Ø 48/57, galv.**
100301	1,020	**Spigot ULT 32**

Item no.	Weight kg	
100224	8,860	**Console Bracket UCB 72** With connection for Bracket Brace UCP.

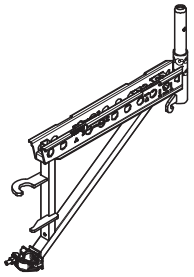

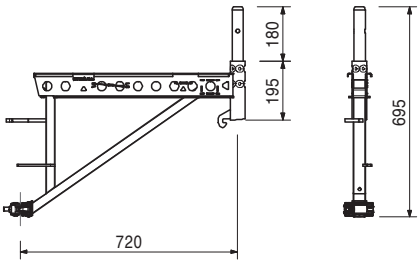

100149	13,200	**Console Bracket UCB 104** With connection for Bracket Brace UCP.

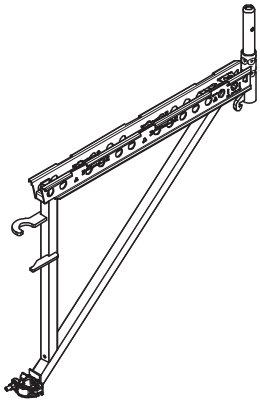

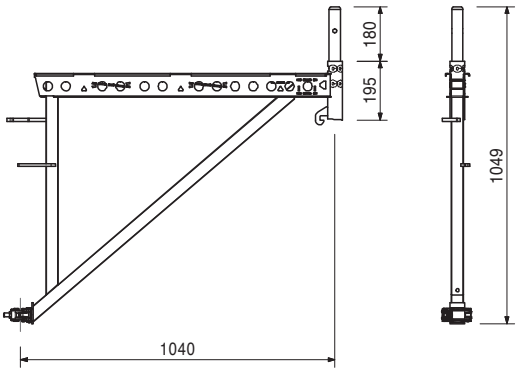

100401	7,620	**Bracket Brace UCP 72/104** For increasing the load-bearing capacity of UCB 72, UCB 104 Brackets and UHD Decking Transoms.

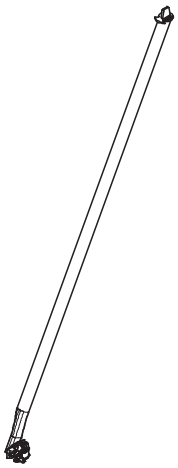

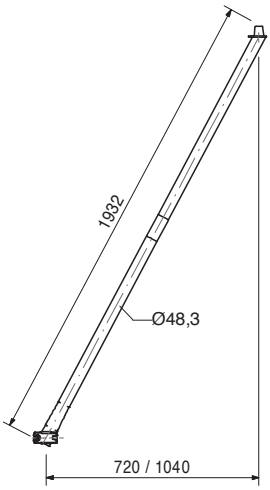

Item no.	Weight kg	
100711	3,860	**Console Bracket UCB 36** For fitting at rosettes.

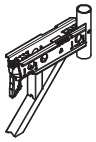

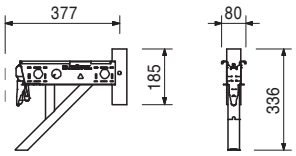

		Accessories
100478	0,110	**Locking Pin Ø 48/57, galv.**
100301	1,020	**Spigot ULT 32**

115204	7,650	**Console Bracket UCB 72 Rosett** For fitting at rosettes.

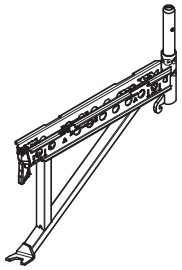

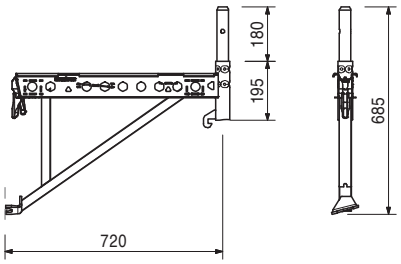

106965	39,300	**Pavement Gantry UVG 104/240** For narrow pavements in inner city areas. Decks securely close the gap to the gangway.

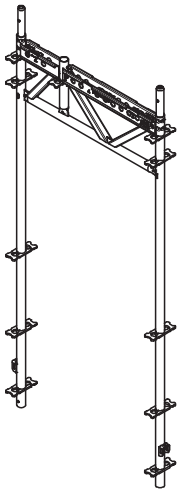

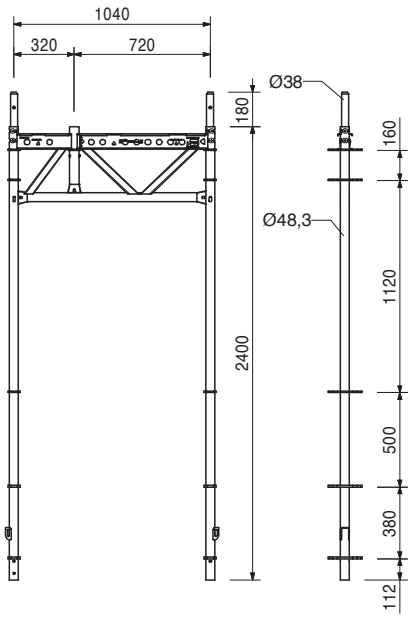

		Accessories
100478	0,110	**Locking Pin Ø 48/57, galv.**
100301	1,020	**Spigot ULT 32**

Item no.	Weight kg	
100322	46,100	**Pavement Gantry UVG 176/240** Decks securely close the gap to the gangway.

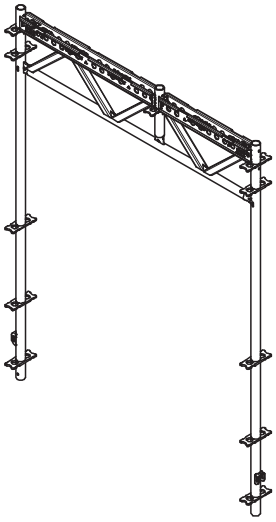

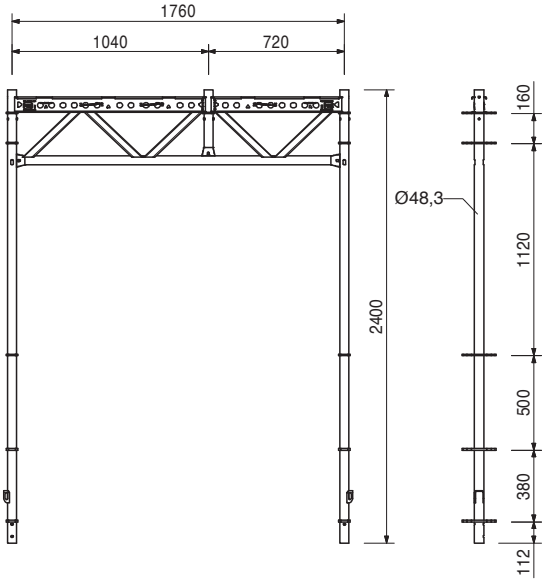

Accessories

100478	0,110	**Locking Pin Ø 48/57, galv.**
100301	1,020	**Spigot ULT 32**

100583	4,740	**Connection Protect Panel UPC** Fixes two UDS Decks in a vertical position.

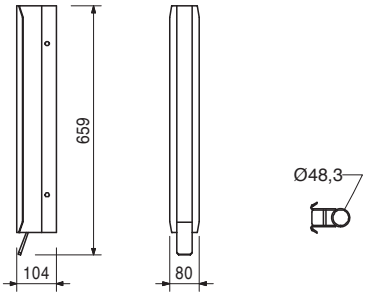

		Coupler Transoms UHC
100580	4,780	**Coupler Transom UHC 72**
100581	6,330	**Coupler Transom UHC 104**
		For decking levels at any height.

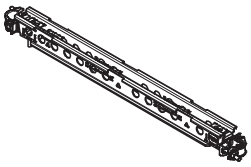

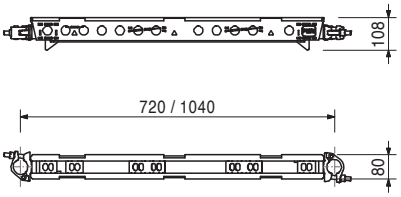

Item no.	Weight kg		
104412	0,719	**Guardrail Coupler UPW** For mounting the Guardrail UPG on the rosette.	**Note** Assembly with guardrail in advance.

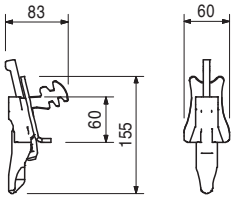

		Guardrails UPG	L	X	Sticker
107045	1,160	**Guardrail UPG 72**	766	720	
107050	1,670	**Guardrail UPG 104**	1086	1040	
100265	2,410	**Guardrail UPG 150**	1546	1500	
100266	3,220	**Guardrail UPG 200**	2046	2000	White
100267	4,020	**Guardrail UPG 250**	2546	2500	Red
100268	4,820	**Guardrail UPG 300**	3046	3000	Black
100810	9,070	**Guardrail UPG 400**	4046	4000	

Note
Longitudinally-stamped with coloured label for easier identification.

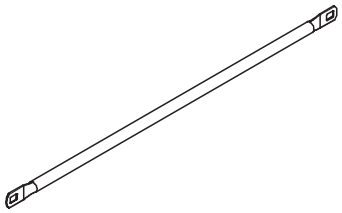

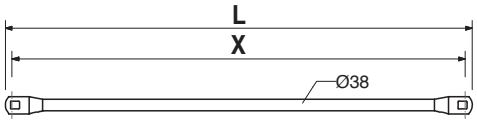

101576	2,680	**Decking Transom Spigot UES** For connecting vertical components to the Decking Transom.	**Note** Take permissible load of the Decking Transom into consideration.

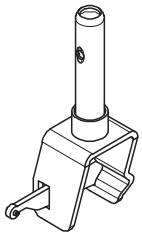

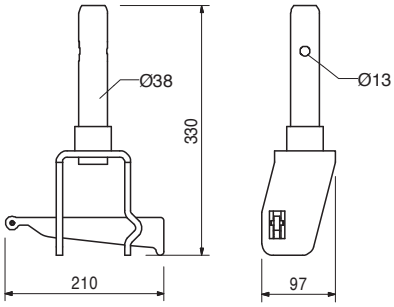

101731	0,841	**Ledger to Ledger Coupler UHA** For connecting ledger to ledger at right-angles.	

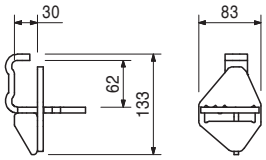

Item no.	Weight kg	
100870	40,700	**Base Beam UVA 250** For free-standing and mobile scaffold units. For symetric and antimetric assembly of UP T 72/T 104 and Rosett 72, 75, 100, 104 and symetric assembly of Rosett b = 75, 100, 150, 200 and 250 cm.

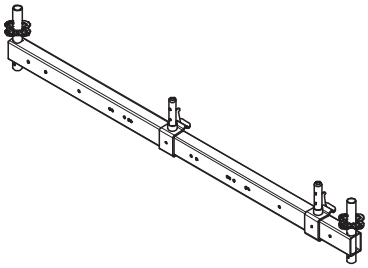

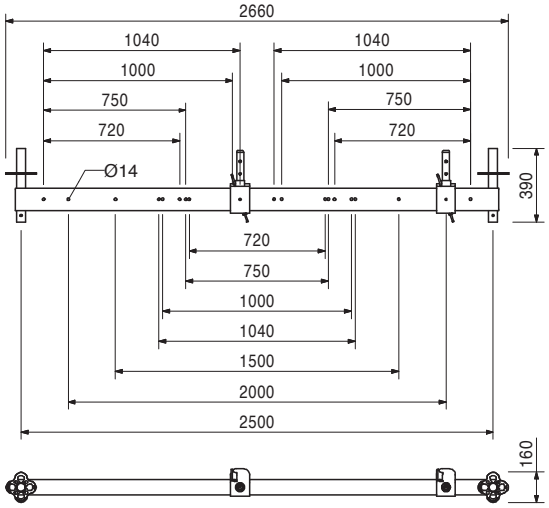

		Staircases UAS
100737	25,000	**Staircase UAS 64 x 250/200, Alu**
100738	29,300	**Staircase UAS 64 x 300/200, Alu**

Assembly on Decking Transom UHD together with Steel Deck UDS.

Technical Data
Permissible load 2.0 kN/m².

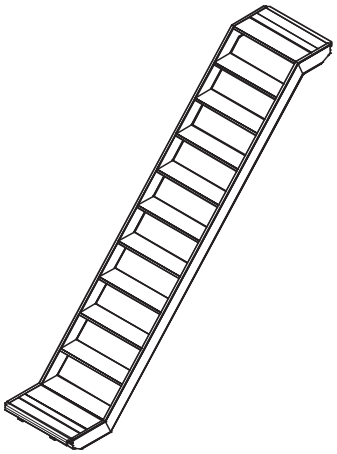

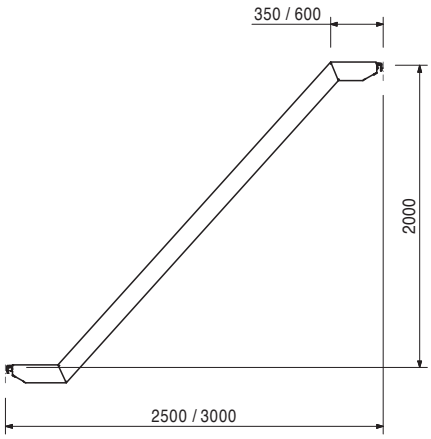

101671	1,980	**Landing Link Panel UAB 30** For closing gaps on alternating Staircase Units UAS 64.

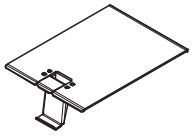

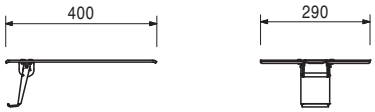

Item no.	Weight kg	
100742	10,000	**Stair Guardrail UAG** Suitable for Staircase UAS 64 x 250/200, UAS 64 x 300/200, UAS 75 x 250/200 and UAS 75 x 300/200 as internal and external guardrails.

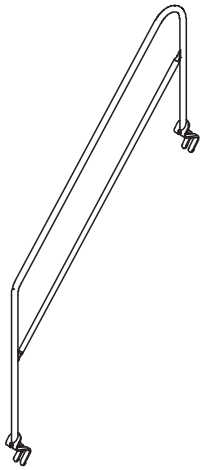

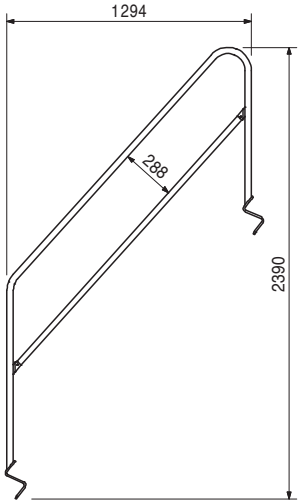

100830	4,960	**Stair Guardrail UAH** For fixing to the stringers of the Staircase Units UAS 64 x 250/200, UAS 64 x 300/200, UAS 75 x 250/200, UAS 75 x 300/200.

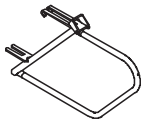

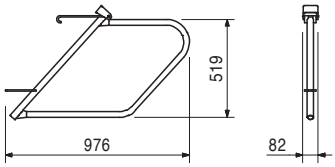

Item no.	Weight kg	Staircase Towers Basic-P	L
001037	233,916	**Staircase Tower Basic-P 250 x 150**	2500
001041	248,856	**Staircase Tower Basic-P 300 x 150**	3000

Basic unit for alternating staircase units.

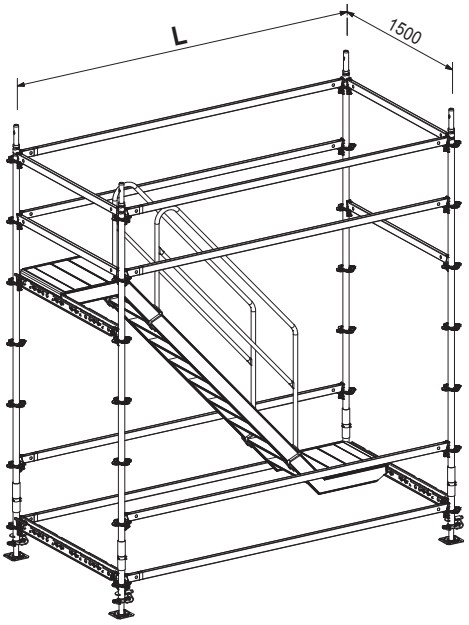

		Staircase Towers Basic-T	L
001036	278,156	**Staircase Tower Basic-T 250 x 150**	2500
001040	300,876	**Staircase Tower Basic-T 300 x 150**	3000

Basic unit for staircase units in the same direction.

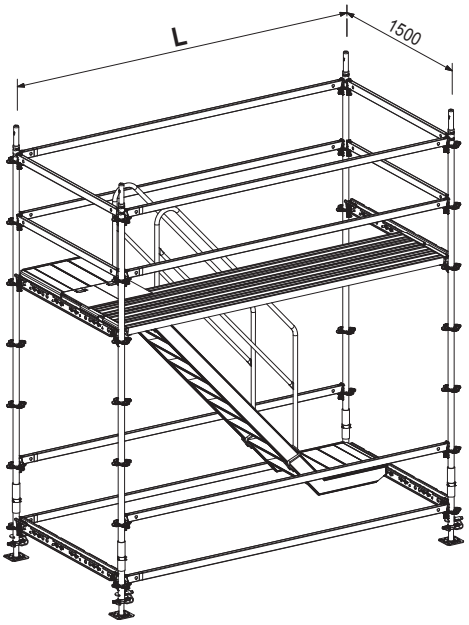

Item no.	Weight kg	Staircase Towers Plus	L
001038	139,166	**Staircase Tower Plus 250 x 150**	2500
001042	150,766	**Staircase Tower Plus 300 x 150**	3000

Extension unit for alternating staircase units.

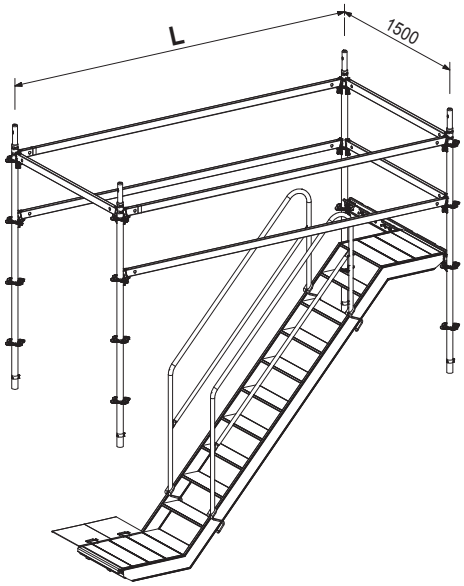

		Staircase Towers Top	L
001039	193,056	**Staircase Tower Top 250 x 150**	2500
001043	212,436	**Staircase Tower Top 300 x 150**	3000

Extension and closing unit for alternating staircase units and as connecting unit for staircase units in the same direction.

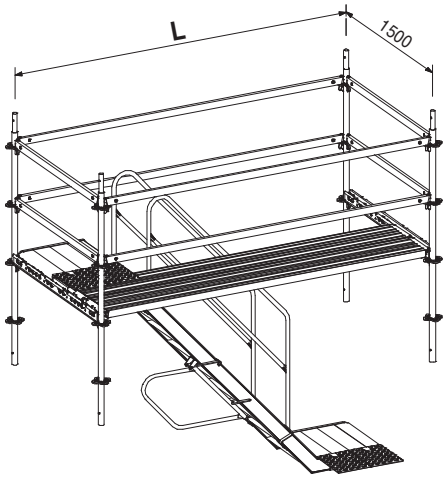

Item no.	Weight kg	
001045	30,414	**Staircase Tower Top Guardrail 250**

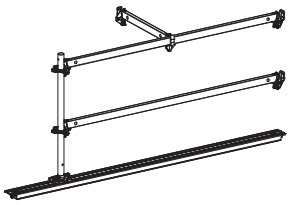

001046	28,614	**Staircase Tower Top Guardrail 300**

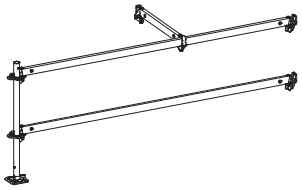

001044	24,780	**Staircase Tower Anchoring** For anchoring the PERI UP staircase unit. A complete unit for one anchoring position.

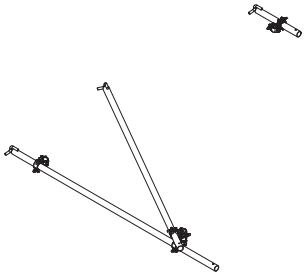

		Ring Bolts UFE
100693	0,169	**Ring Bolt UFE 12/90**
100694	0,190	**Ring Bolt UFE 12/120**
100695	0,250	**Ring Bolt UFE 12/190**
		For assembling the Wall Tie UWT. Wall Inserts UFI 14 required.

Safety Instructions
With marking for screw-in depth.

		Wall Inserts UFI
100696	0,007	**Wall Insert UFI 14/70**
100697	0,009	**Wall Insert UFI 14/100**
100698	0,010	**Wall Insert UFI 14/135**

PERI International

01 PERI GmbH
Rudolf-Diesel-Strasse
89264 Weissenhorn
info@peri.com
www.peri.com

02 France
PERI S.A.S.
77109 Meaux Cedex
peri.sas@peri.fr
www.peri.fr

03 Switzerland
PERI AG
8472 Ohringen
info@peri.ch
www.peri.ch

04 Spain
PERI S.A.
28110 Algete - Madrid
info@peri.es
www.peri.es

05 Belgium/Luxembourg
N.V. PERI S.A.
1840 Londerzeel
info@peri.be
www.peri.be

06 Netherlands
PERI B.V.
5480 AH-Schijndel
info@peri.nl
www.peri.nl

07 USA
PERI Formwork Systems, Inc.
Elkridge, MD 21075
info@peri-usa.com
www.peri-usa.com

08 Indonesia
PT Beton Perkasa Wijaksana
Jakarta 10210
bpw@betonperkasa.com
www.peri.com

09 Italy
PERI S.p.A.
20060 Basiano
info@peri.it
www.peri.it

10 Japan
PERI Japan K.K.
Tokyo 103-0015
info@perijapan.jp
www.perijapan.jp

11 United Kingdom/Ireland
PERI Ltd.
Rugby, CV23 0AN
info@peri.ltd.uk
www.peri.ltd.uk

12 Turkey
PERI Kalıp ve İskeleleri
Esenyurt / İstanbul 34510
info@peri.com.tr
www.peri.com.tr

13 Hungary
PERI Kft..
1181 Budapest
info@peri.hu
www.peri.hu

14 Malaysia
PERI Formwork Malaysia
Sdn. Bhd.
43300 Seri Kembangan,
Selangor Darul Ehsan
info@perimalaysia.com
www.perimalaysia.com

15 Singapore
PERI ASIA Pte. Ltd
Singapore 387355
pha@periasia.com
www.periasia.com

16 Austria
PERI Ges.mbH
3134 Nußdorf ob der Traisen
office@peri.at
www.peri.at

17 Czech Republic
PERI spol. s r.o.
252 42 Jesenice u Prahy
info@peri.cz
www.peri.cz

18 Denmark
PERI Danmark A/S
2670 Greve
peri@peri.dk
www.peri.dk

19 Finland
PERI Suomi Ltd. Oy
05460 Hyvinkää
info@perisuomi.fi
www.perisuomi.fi

20 Norway
PERI Norge AS
3036 Drammen
info@peri.no
www.peri.no

21 Poland
PERI Polska Sp. z o.o.
05-860 Płochocin
info@peri.pl.pl
www.peri.pl.pl

22 Sweden
PERIform Sverige AB
30013 Halmstad
peri@periform.se
www.periform.se

23 Korea
PERI (Korea) Ltd.
Seoul 135-080
info@perikorea.com
www.perikorea.com

24 Portugal
PERIcofragens Lda
2790-326 Queijas
info@peri.pt
www.peri.pt

25 Argentina
PERI S.A.
B1625GPA Escobar – Bs. As.
info@peri.com.ar
www.peri.com.ar

26 Brazil
PERI Formas e
Escoramentos Ltda.
Vargem Grande Paulista
São Paulo
info@peribrasil.com.br
www.peribrasil.com.br

27 Chile
PERI Chile Ltda.
Colina, Santiago de Chile
peri.chile@peri.cl
www.peri.cl

28 Romania
PERI România SRL
077015 Baloteşti
info@peri.ro
www.peri.ro

29 Slovania
PERI Slowenien
2000 Maribor
peri.slo@triera.net
www.peri.com

30 Slovakia
PERI spol. s r.o.
903 01 Senec
info@peri.sk
www.peri.sk

31 Australia
PERI Australia Pty. Ltd.
Glendenning NSW 2761
info@periaus.com.au
www.periaus.com.au

32 Estonia
PERI AS
76406 Saku vald
Harjumaa
peri@peri.ee
www.peri.ee

33 Greece
PERI Hellas Ltd.
194 00 Koropi
info@perihellas.gr
www.perihellas.gr

34 Latvia
PERI SIA
2118 Salaspils novads,
Rigas rajons
info@peri-latvija.lv
www.peri-latvija.lv

35 United Arab Emirates
PERI (L.L.C.)
Dubai
perillc@perime.com
www.perime.com

36 Canada
PERI Formwork Systems, Inc.
Bolton, ON – L7E 1K1
info@peri.ca
www.peri.ca

37 Lebanon
Lebanon Representative Office
Jdeideh
lebanon@peri.de
www.peri.de

38 Lithuania
PERI UAB
02300 Vilnius
info@peri.lt
www.peri.lt

39 Morocco
PERI S.A.
Tanger
peri25@menara.ma
www.peri.com

40 Israel
PERI Formwork
Engineering Ltd
Petach Tikva, 49002
info@peri.co.il
www.peri.co.il

41 Bulgaria
PERI Bulgaria EOOD
1839 Sofia
peri.bulgaria@peri.bg
www.peri.bg

42 Iceland
Armar ehf.
220 Hafnarfjörður
www.armar.is

43 Kazakhstan
TOO PERI Kazakhstan
050059 Almaty
peri@peri.kz
www.peri.kz

44 Russian Federation
OOO PERI
142407, Noginsk District
moscow@peri.ru
www.peri.ru

45 South Africa
Wiehahn Formwork and
Scaffolding (Pty) Ltd.
7600 Stellenbosch
info@wiehahn.co.za
www.wiehahn.co.za

46 Ukraine
TOW PERI Ukraina
07400 Brovary
peri@peri.ua
www.peri.ua

47 Egypt
Egypt Branch Office
11361 Heliopolis / Cairo
info@peri.com.eg
www.peri.com.eg

48 Serbia
PERI Oplate d.o.o.
11272 Dobanovci
office@peri.rs
www.peri.rs

49 Mexico
PERI Cimbras y Andamios,
S.A. de C.V.
Estado de México,
info@peri.com.mx
www.peri.com.mx

50 Azerbaijan
PERI Kalıp ve İskeleleri
Baku
peribaku@peri.com.tr
www.peri.com.tr

51 Turkmenistan
PERI Kalıp ve İskeleleri
Aşgabat
ahmet.kadioglu@peri.com.tr
www.peri.com.tr

52 Belorussia
PERI Belarus
220030 Minsk
info@peri.by
www.peri.com

53 Croatia
PERI oplate i skele d.o.o.
10 250 Donji Stupnik/
Zagreb
info@peri.com.hr
www.peri.com.hr

54 Iran
PERI GmbH
Iran Branch Office
Tehran
info@peri.ir
www.peri.ir

55 India
PERI (India) Pvt Ltd
Mumbai – 400064
info@peri.in
www.peri.in

56 Jordan
PERI GmbH - Jordan
11947 Amman
jordan@peri.com
www.peri.com

57 Kuwait
PERI Kuwait
13011 Kuwait
kuwait@peri.com
www.peri.com

58 Saudi Arabia
PERI Engineering
Division of Jamjoom
Consult Saudi Arabia
21463 Jeddah
info@peri.com.sa
www.peri.com.sa

59 Qatar
PERI Qatar LLC
P.O.Box: 31295 - Doha
info@periqatar.com
www.periqatar.com

60 Algeria
Société PERI S.A.S.
Kouba - Alger
peri.alger@peri.fr
www.peri.fr

61 Albania
PERI Sh.p.k.
Tirane
erti.hasanaj@peri.com.tr
www.peri.com.tr

62 Peru
PERI Peruana SAC
Villa El Salvador, Lima
contacto@peri.com.pe
www.peri.com.pe

63 Panama
PERI Panama Inc.
0832-00155 Panama City
info@peri.com.pa
www.peri.com.pa

64 Angola
PERIcofragens, Lda.
Luanda
renato.portugal@peri.pt
www.peri.pt

65 Nigeria
Heights Access Nigeria Ltd.
Victoria Island, Lagos
info@heightsaccessng.com
www. heightsaccessng.com

66 Oman
PERI (L.L.C.)
Muscat
perimct@perime.com
www.perime.com

The optimal System for every Project and every Requirements

Wall Formwork

Column Formwork

Slab Formwork

Climbing Systems

Tunnel Formwork

Bridge Formwork

Shoring Systems

Construction Scaffold

Facade Scaffold

Industrial Scaffold

Access

Protection Scaffold

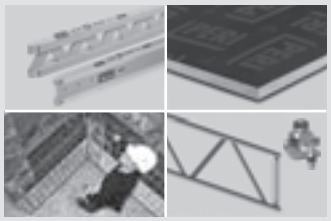

System-Independent Accessories

Services

DE en 02 | 2012 3ma 792041 © PERI GmbH

PERI GmbH
Formwork Scaffolding Engineering
P.O. Box 1264
89259 Weissenhorn
Germany
Tel. +49 (0)7309.950-0
Fax +49 (0)7309.951-0
info@peri.com
www.peri.com