TRIO
Panel Formwork

Instructions for Assembly and Use – Standard Configuration

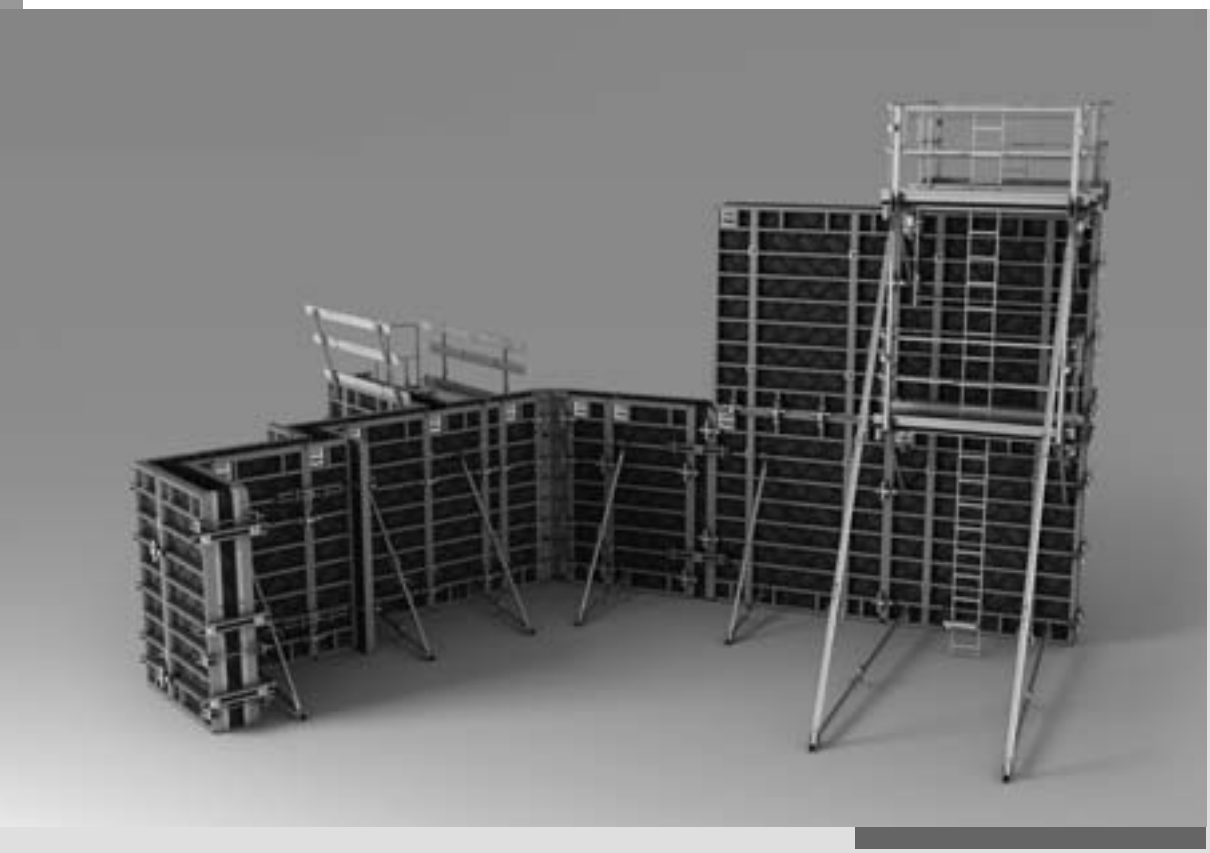

Edition 08 | 2014

Content

Key

Safety Instructions · Visual Check · Load-bearing point · Protective helmet · Safety glasses

Note · Tip · PSAgA · Protective gloves · Safety shoes

Introduction

Overview, Main Components

For a better overview, only one part of the required working platforms is shown.

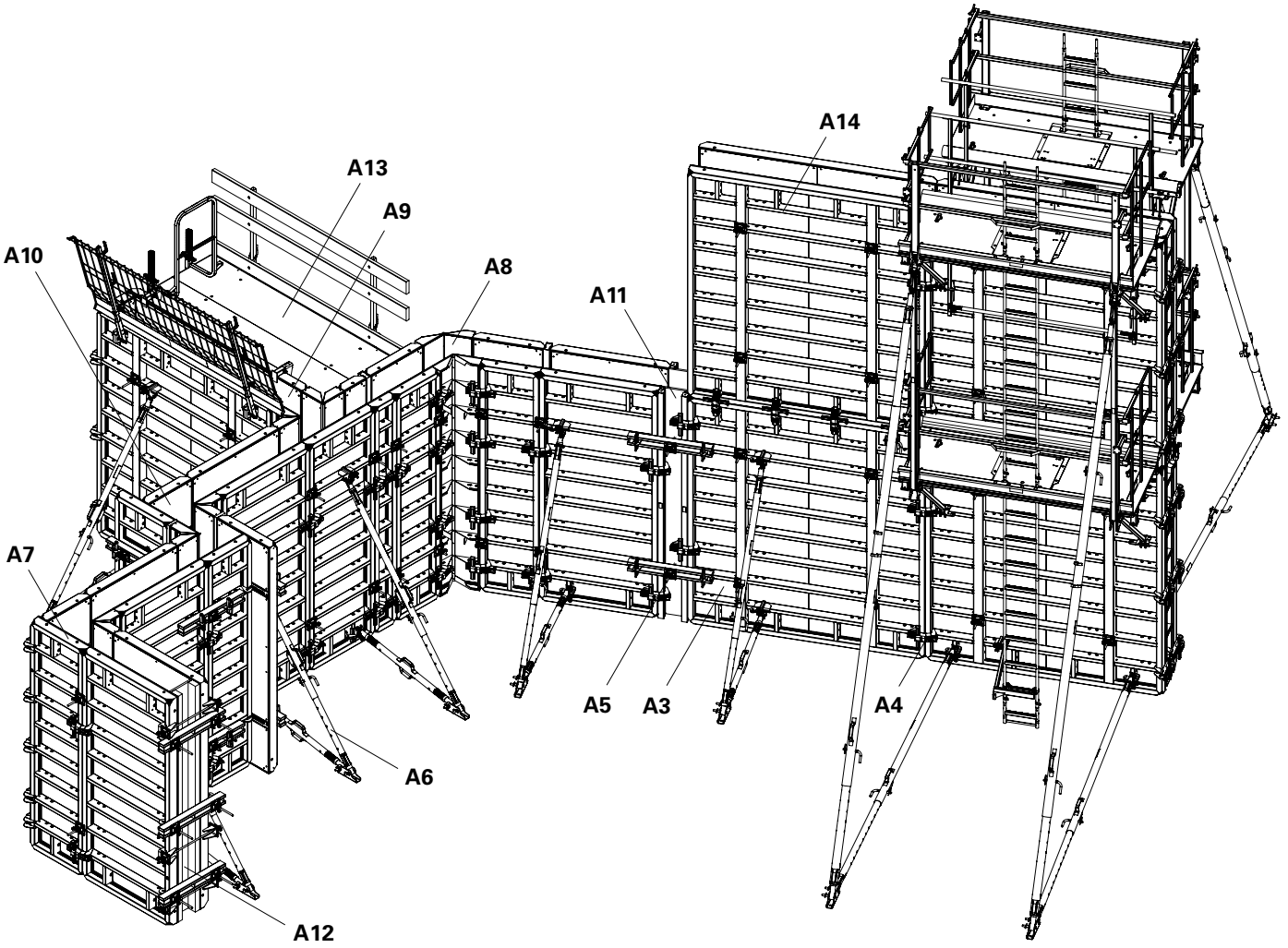

A3 Panel
A4 Panel Connection
A5 Anchor Point
A6 Push-Pull Prop
A7 Right-Angled Corner
A8 Oblique Angle
A9 T-Junction
A10 Wall Offset
A11 Length Compensation
A12 Stopend Formwork
A13 Working and Concreting Scaffold
A14 Extension

Intended Use

Product Description
PERI TRIO is a panel formwork used for forming walls and columns with different dimensions. The panels can be used both vertically and horizontally.
TRIO only requires a few panel widths. Only one part is required for all panel connections, the Alignment Coupler BFD. This allows compensations up to 10 cm and height extensions up to 5.40 m without any additional bracing. System components such as the Shaft Panel or the Stopend Panel for continuous reinforcement and the installation of water bars make forming operations very easy. Accessories such as concreting plattforms as well as a complete platform system provide safe working conditions. Components made of steel are coloured red - aluminium components are yellow powder-coated.

System Dimensions
Panels are available in the following heights:
3.30 m (steel)
2.70 m (steel and aluminium)
1.20 m (steel)
0.90 m (aluminium)
0.60 m (steel)
The panel size increments are 30 cm.

Application
The standard configuration includes formwork for vertical walls up to 8.10 m and wall thicknesses from 18 to 40 cm including push-pull-props and safety equipment.

As anchor systems, DW 15 or DW 20 are used.

Technical Data	Fresh concrete pressure according DIN 18218	Evenness according to DIN 18202
TRIO 270 Steel		
Hydrostatic Pressure	67,5 kN/m²	Line 7
Constant Pressure	56,0 kN/m²	Line 7
Constant Pressure	81,0 kN/m²	Line 6
TRIO 270 Alu		
Hydrostatic Pressure	67,5 kN/m²	Line 7
TRIO 330		
Hydrostatic Pressure	82,5 kN/m²	Line 7
Constant Pressure	75,0 kN/m²	Line 7
Constant Pressure	83,0 kN/m²	Line 6

Misapplications

General
The use in a way not intended, deviating from the standard configuration or the intended use according to the assembly instructions, represents a misapplication with a potential safety risk.

Only PERI original components may be used. The use of other products and spare parts represents a misapplication with associated safety risks.

Changes to PERI components are not permitted and represent a misapplication with associated safety risks.

The illustration on the front cover of these assembly instructions is understood to be a system representation only. The structures shown in these assembly instructions are examples and feature only one component size. They are valid for all component sizes contained in the standard configuration.

For a better understanding, detailed illustrations are partly incomplete. The safety installations which have possibly not been featured in these detailed drawings must nevertheless be available.

Safety Instructions

General
PERI products have been exclusively designed for use in the industrial and commercial sectors by suitably trained personnel.

These assembly instructions serve as basis for the project-related risk assessment and the instructions for the provision and use of the system by the contractor (user).
However, they do not replace them.

Before each use, the materials and the working areas are to be regularly checked in particular for signs of damage, stability and functionality.
Damaged components must be replaced immediately on site and may no longer be used.

Safety instructions and permissible loads must be observed at all times.

Remove safety components only when they are no longer required or if the official representative of the contractor gives instructions for this to take place.

For the application, inspection and repair of our products, the current safety regulations and guidelines must be observed in the respective countries where they are being used.

Components provided by the contractor must conform with the characteristics required in these assembly instructions as well as with all valid construction guidelines and standards.
In particular, the following applies if nothing else is specified:
- Timber components: Strength Class C24 for Solid Wood according to EN 338.
- Scaffold tubes: galvanised steel tubes with minimum dimensions of Ø 48.3 x 3.2 mm according to EN 12811-1:2003 4.2.1.2.
- Scaffold tube couplings according to EN 74.

Any deviations from the standard configuration may only be carried out after a separate risk assessment has been done by the contractor (user).

On this basis, appropriate measures for the working safety and stability are to be implemented.

The contractor must ensure that the assembly instructions provided by PERI are available for the users at all times and that they are also fully understood.

During unfavourable weather conditions, suitable precautions and measures are to be implemented in order to guarantee working safety and stability.

After exceptional events or long periods of downtime on the jobsite where the formwork or sub-structure are used, the unit and its components must be checked for signs of damage as well as stability and functionality by an authorized person.

The contractor (user) must ensure the stability throughout all phases of construction. He must ensure and verify that all loads which occur can be safely transferred.

The contractor (user) has to provide safe working areas for site personnel which are to be reached through the provision of safe access ways. Areas of risk must be cordoned off and clearly marked. Hatches and openings on accessible working areas must be kept closed during working operations.

The contractor must ensure that the user fulfils the minimum requirements for personal protective equipment, e.g.:
- protective gloves,
- safety helmet,
- safety shoes,
- safety glasses,
- PPE.

Storage and Transportation
Do not drop the components.

Store and transport components ensuring that no unintentional change in their position is possible. Detach lifting gear from the lowered components only if they are in a stable position and no unintentional change is possible.

During the moving procedure, ensure that components are picked up and set down so that unintentional falling over, falling apart, sliding or rolling is avoided.

Use only suitable load-carrying equipment to move the components as well as the designated load-bearing points.

During the moving procedure, always guide the components by means of a rope.

Move components on clean, flat and sufficiently load-bearing surfaces only.

Use original PERI storage and transport systems, e.g. crate pallets, pallets or stacking devices.

Safety Instructions

System-Specific
Do not exceed the permissible fresh concrete pressure.

Retract components only when the concrete has sufficiently hardened and the responsible person has given the instructions to strike.

Only use designated PERI lifting gear.

During striking, do not tear off the formwork elements with the crane.

If a storm warning is given, additional push-pull props are to be attached or other bracing measures are to be carried out along with implementing the details contained in the PERI design tables.

After exceptional events or long periods of downtime in which the formwork was not used, the unit and its components must be checked for stability and function.

Additional Product Information

- TRIO brochure
- TRIO poster
- PERI design tables
- Instructions for Use: Lifting Hook MAXIMO 1.5 t
- Instructions for Use: Lifting Gear Combi MX
- Instructions for Use: Lifting Gear MX
- Instructions for Use: Pallets and Stacking Devices
- PERI Rental Service: MAXIMO, TRIO, DOMINO Panel Formwork

Care and Maintenance Instructions

Formwork
Regular cleaning and care is necessary in order to maintain the value and usability of the formwork material in the long-term. Additionally, some repair work may also be inevitable due to the tough working conditions. The following points should help to keep care and maintenance costs as low as possible.

The panels (used or new) should be sprayed all over with the PERI Bio Clean concrete release agent before every use. This makes it easier and quicker to clean the formwork. The concrete release agent should always be sprayed on thinly and evenly!

Spray rear side of the formlining with water immediately after concreting. This saves on time-consuming cleaning operations.

The formlining of the panels must be sprayed with the release agent immediately after striking if in continuous use. Only then cleaning can take place with a scraper, brush or rubber lip scraper. Important: do not clean plywood formlining with a high-pressure cleaner as this can lead to damage.

Box outs and built-in parts should be fixed with double-headed nails. This makes it easier to remove the nails later on and prevents damage to the formlining to a large extent.

Any unneccessary anchor holes should be sealed with plugs. As a result, this eliminates subsequent cleaning or repair work. Anchor holes accidentally blocked with concrete are freed by means of a steel pin from the formlining side.

When putting down bundles of reinforcement bars or other heavy objects on horizontally-stored formwork elements, suitable support items, e.g. square timbers, are to be used.
This prevents indentations and damage being caused to the formlining.

If possible, concrete internal vibrators are to be used with rubber caps.
This reduces the risk of damage to the formlining if accidentally “inserting” the internal vibrator between the reinforcement and formlining.

The panels should not be treated with concrete release agent immediately before transport due to safety reasons.

Steel brushes or hard metal scrapers must not be used for cleaning powder-coated elements or accessories. Such cleaning processes will destroy the high-quality powder coating.

Use spacers for reinforcement with large-area support or flat supports. This prevents indentations being created in the formlining by the load.

Mechanical components, such as spindles or gear mechanisms, must be cleaned of dirt or concrete residue before and after use, and then greased with suitable lubricants.

A1 Storage and Transportation

Follow Instructions for Use for PERI pallet and stacking devices!
Manually-created transport units must be correctly stacked and secured!
Pallets and stacked components are to be protected against the effects of the weather, e.g. secure packed components with tension straps against lifting!

Transport
PERI pallets and stacking devices are suitable for lifting by crane or forklift. They can also be shifted with the PERI Pallet Lifting Trolley.
All pallets and stacking devices can be lifted using both the longitudinal and front sides.

The following are just some examples.

Stacking Device MAXIMO
For 5 TRIO panels of one size with an all-round 6 cm edge profile.
(Fig. A1.01)

Crate Pallet 80 x 120
Holds, e.g. 160 TRIO BFD alignment couplers.
(Fig. A1.02)

Stacking Aid TRIO Corner
For 90° inside corners.
(Fig. A1.03)

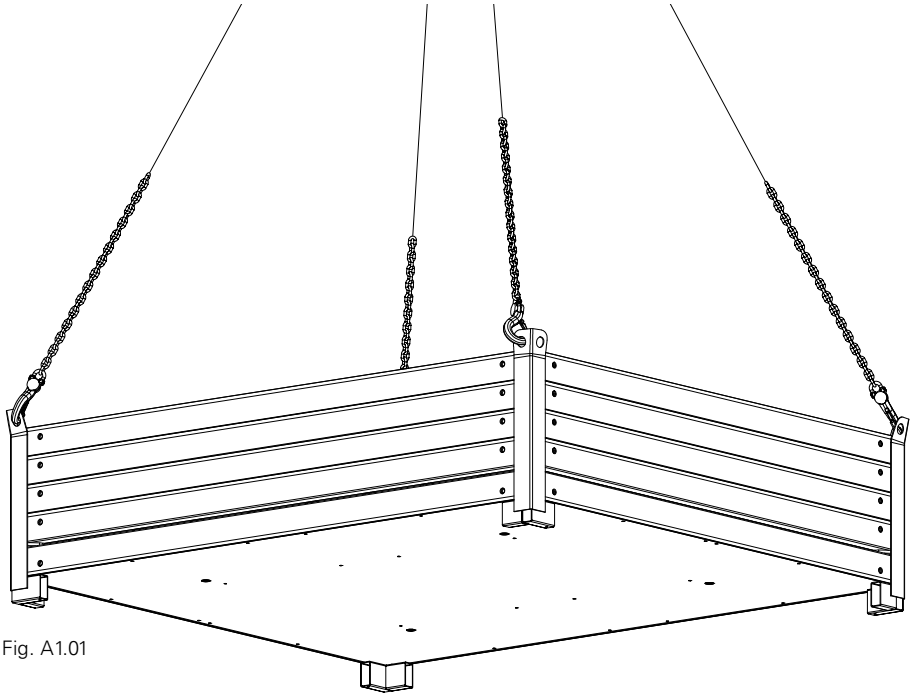

Fig. A1.01

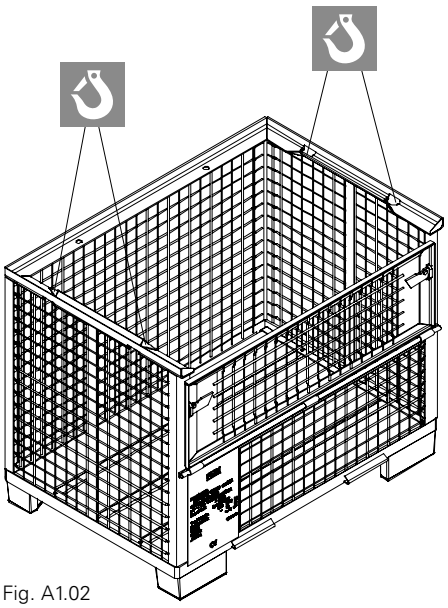

Fig. A1.02

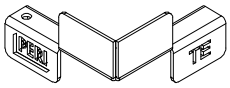

Fig. A1.03

Primary Formwork

1. Assemble horizontally.
2. Mount push-pull prop
– on the first panel: 2 push-pull-props
– second panel onwards: 1 push-pull prop.
3. Transport to place of operation by crane.

(Fig. A2.01, A2.02)

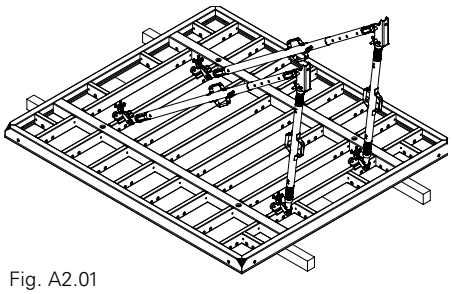

Fig. A2.01

Secure panels against tipping over and wind forces! The Lifting Hook 1.5 t is to be released only when the push-pull prop has been mounted!

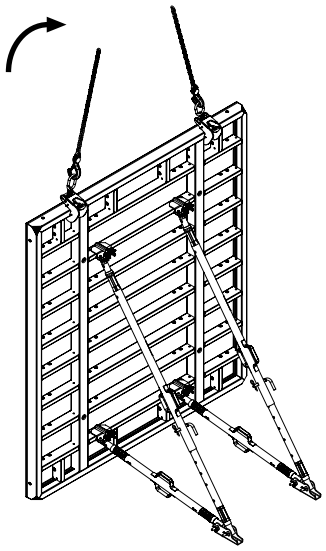

Fig. A2.02

Closing formwork with concreting scaffold

1. Mount scaffold brackets, decking and handrail boards on the horizontally-positioned TRIO panel.
2. Transport to place of use.
3. Install anchors.

(Fig. A2.03)

Release Lifting Hook 1.5 t only after a top anchor has been installed!

Forming from the external or internal corner in the direction of the compensation.

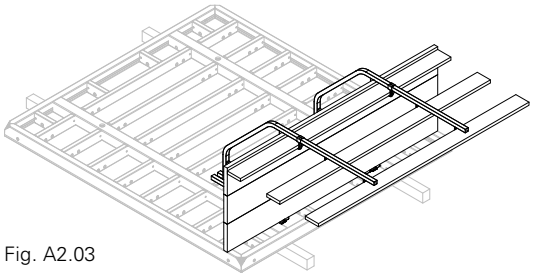

Fig. A2.03

Load-Carrying Equipment

When using the PERI load-carrying equipment, the respective Instructions for Use are always to be observed!

Concreting

Concreting must always take place with site personnel positioned on a secure working scaffold.
(Fig. A2.04)

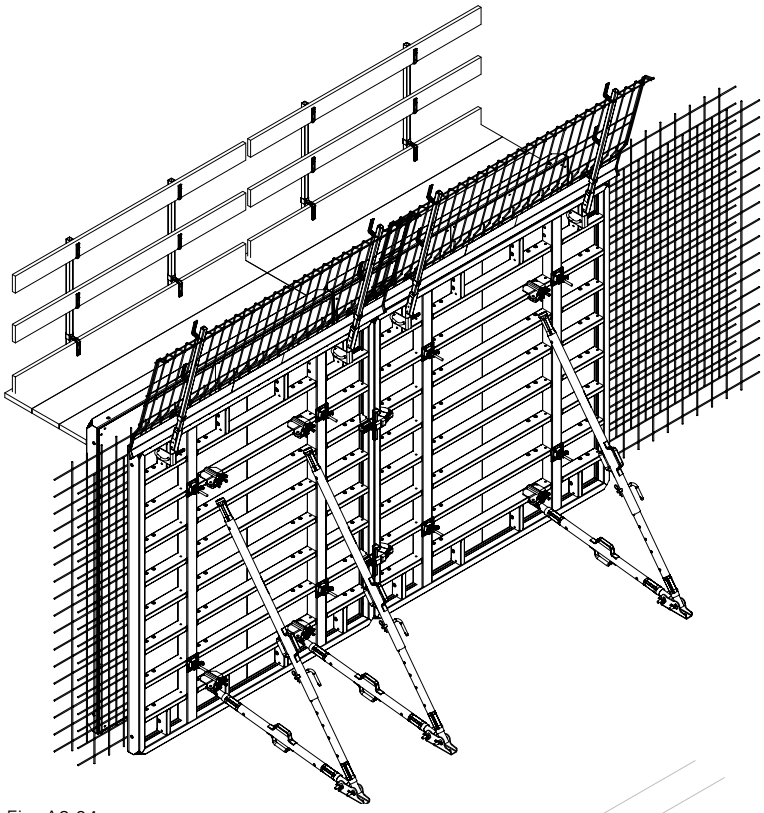

Fig. A2.04

Striking, moving

from the compensation to the corners.

Concrete strength must be taken into account!
Secure panels against tipping over and wind forces!
Detach lifting gear only when the push-pull props are securely fixed!

Closing Formwork

1. Mount lifting hook on the panel and attach to the crane lifting gear.
2. Remove ties.
3. Release panel connection.
4. Move panel, clean and transport to place of operation by crane.
5. Connect panel, install anchors.
6. Release crane lifting gear.

Primary Formwork

1. Mount lifting hook on the panel and attach to the crane lifting gear.
2. Release panel connection.
3. Release push-pull prop anchoring.
4. Release panel from the concrete, e.g. with a stripping bar.
5. Move panel, clean and transport to place of operation by crane.
6. Connect panel.
7. Install push-pull props.
8. Release crane lifting gear. (Fig. A2.05)

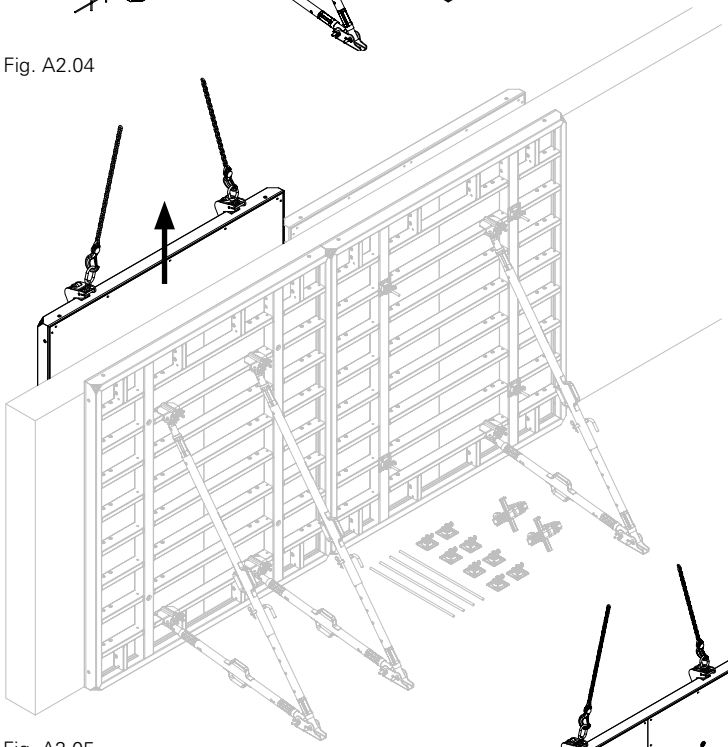

Fig. A2.05

Cleaning

with PERI Bio Clean and PERI spraying equipment.
(Fig. A2.06)

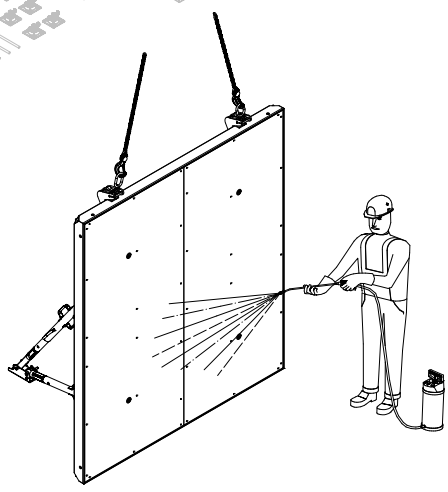

Fig. A2.06

A3 Panel

Panel Overview

Height [cm]	Width [cm] 240	120	90	72	60	30	TE	TGE
330	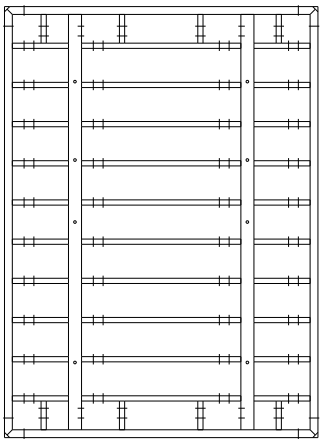 S)	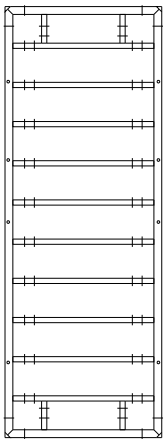 S)	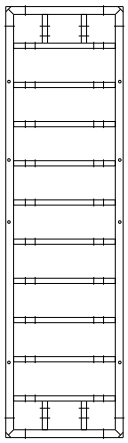 S)	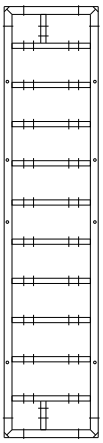 S) N)	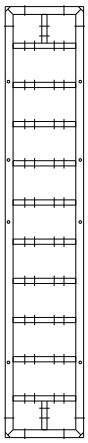 S)	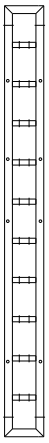 S)	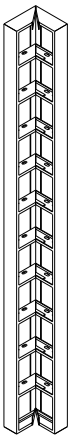	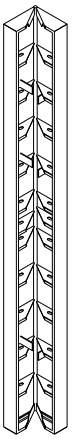
270	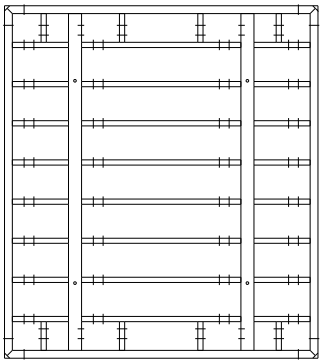 S)	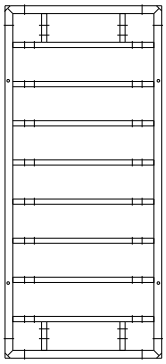 S)	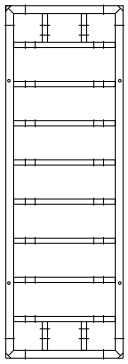 S) A)	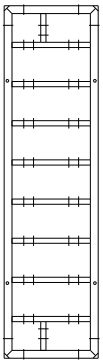 S) A) N)	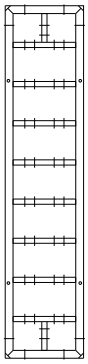 S) A)	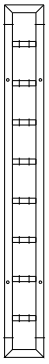 S) A)	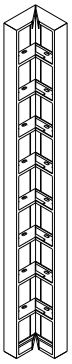	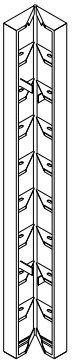
120	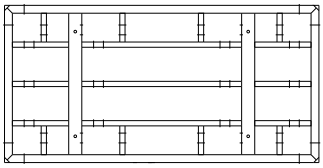 S)	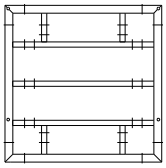 S)	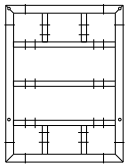 S)	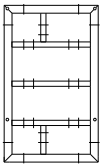 S) N)	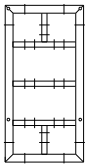 S)	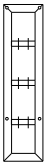 S)	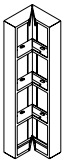	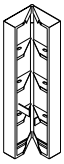
90		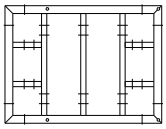 A)		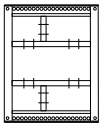 A) M)	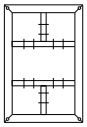 A)	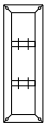 A)	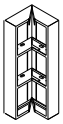	
60			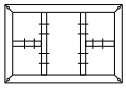 S)	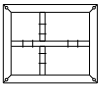 S)	 S)	 S)		

Key

S) Panels with steel frames (red powder-coated)
A) Panels with aluminium frames (yellow powder-coated)
N) Standard panels or multi-purpose panels
M) Panels only as multi-purpose panels

A3 Panel

Panel width 2.40 m

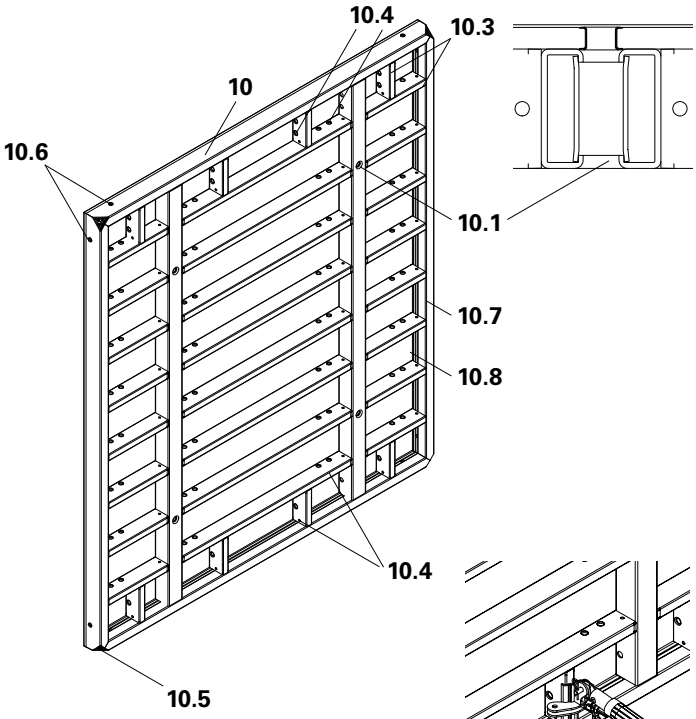

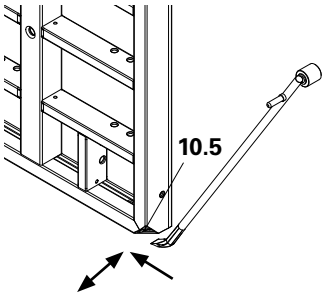

Panel width < 2.40 m

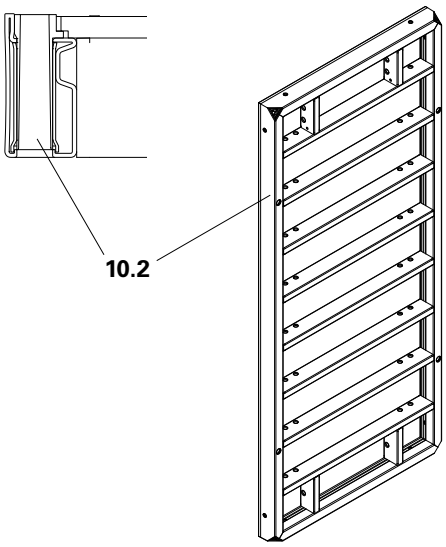

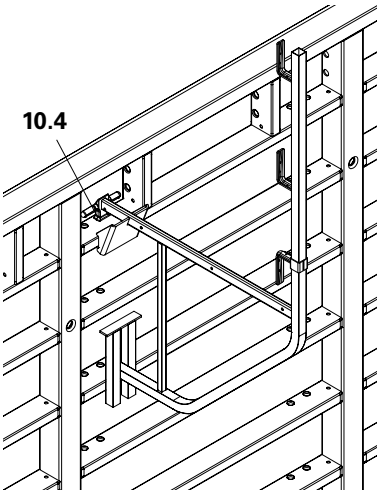

10	Panel
10.1	Offset tie point
10.2	Tie point in edge profile
10.3	Panel strut
10.4	Connecting holes for scaffold brackets, push-pull-props and other accessories
10.5	Levering corner
10.6	Connecting holes for transportation
10.7	Frame
10.8	Formlining

Alignment Coupler BFD

By hammering in the wedge, the panel connection is:
1. Flush
2. Aligned
3. Tight
(Fig. A4.01)

Areas of use:
- standard panel joint
- external corner, internal corner, see A8
- oblique and acute-angle corners, see A9
- stopend formwork, see A13
- infill timber, see A12
- extensions, see A15

Quantity
2 x Alignment Coupler BFD (20) with h = 2.70 m on the standard panel joint (Fig. A4.02)

Assembly
1. Place wedge (20.1) in upper end position.
2. Open sliding part (20.2).
3. Place Alignment Coupler BFD on the panel strut (10.3).
4. Close sliding part. Continuous adjustment using the keyway (20.4) possible.
5. Secure wedge. (Fig. A4.03, A4.04)

The Alignment Coupler BFD is now mounted.

If the wedge head (20.5) is up against the sliding part, there is no clamping effect! If so, release the wedge, re-position sliding part and once again secure with hammer blows.

Fig. A4.01

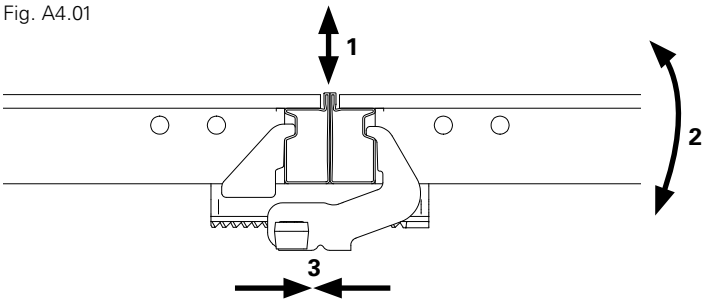

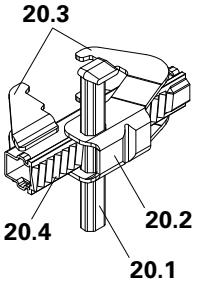

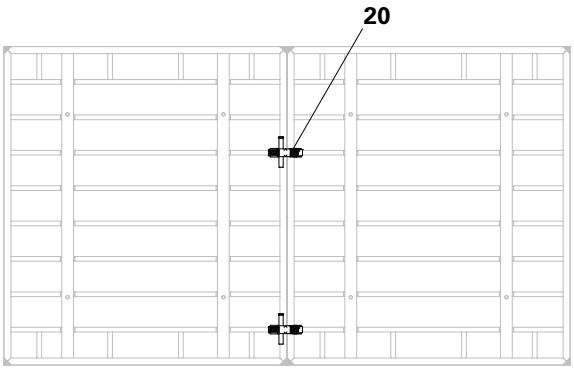

Fig. A4.02

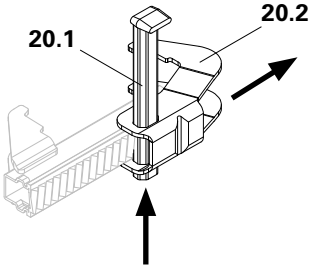

Fig. A4.03

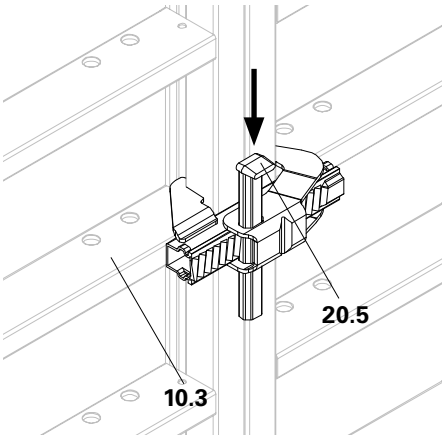

Fig. A4.04

Compensation Waler TAR 85

The Compensation Waler TAR 85 (23) is used as a bracing, aligning and load-transferring panel connection.

Areas of use:
- longitudinal infills, see A12
- corners with large wall thicknesses, see A8
- acute and oblique-angle corners, see A9
- wall offsets, see A11
- extensions, see A15

Assembly
1. Attach hook of the hook clip (23.1) to the connection hole (10.4) of the panel.
2. Securely fix the wedges (23.2).

(Fig. A4.05)

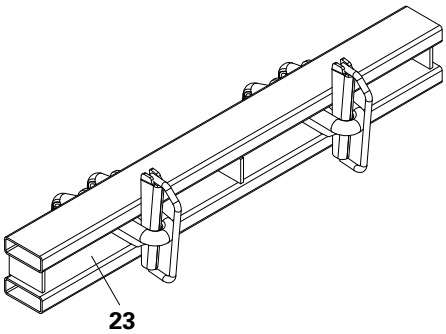

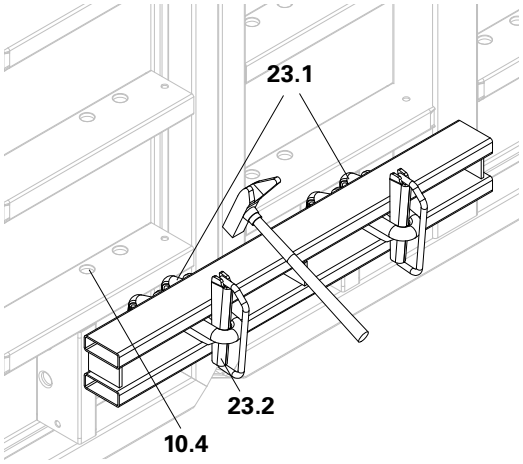

Fig. A4.05

Waler 85

For stopend formwork.

Assembly
1. Push Stopend Tie TS (25) through the TRIO Waler 85 (24) and attach to the frame profile of the panel.
2. Tighten by means of the Wingnut Pivot Plate (33).

(Fig. A4.06)

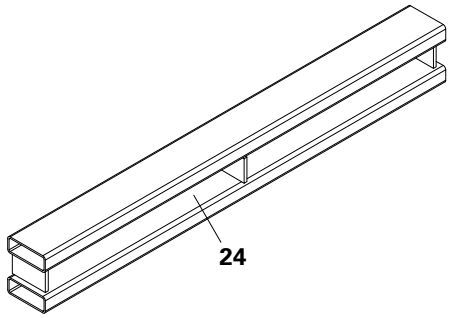

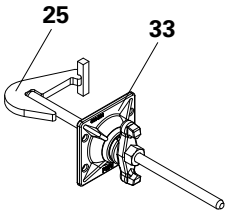

Fig. A4.06

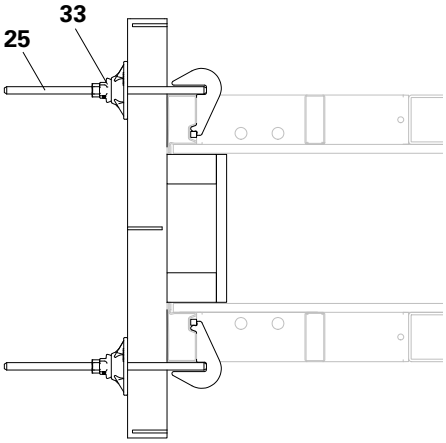

Tie System DW 15 (standard)

Permissible load 90 kN according to DIN 18216.

Required components for DW 15:
- Tie Rod DW 15 (30)
- Spacer Tube (31)
- Cone (32)
- Wingnut Pivot Plate DW 15 (33)

(Fig. A5.01)

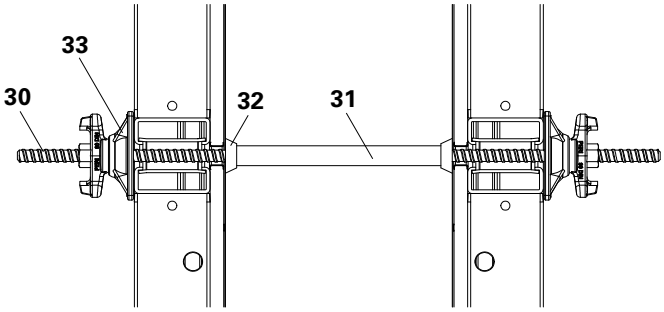

Fig. A5.01

Tie System DW 20

Permissible load 150 kN according to DIN 18216.

For higher concrete pressures of more than 56 kN/m², the DW 20 is used.

Required components for DW 20:
- Tie Rod DW 20 (30)
- Spacer Tube (31)
- DK Sealing Cone (32)
- Counterplate DW 20 (34)
- Wingnut DW 20 (35)

(Fig. A5.02)

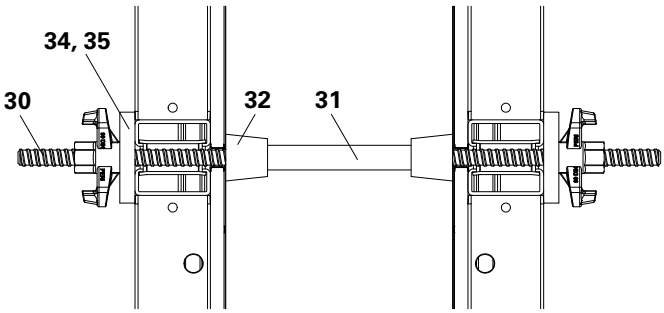

Fig. A5.02

Application
- Only use the number of ties as is necessary. SUse plugs to seal those tie holes which are not required in the panel.
- Do not exceed permissible tie loads.
- Comply with rate of rise.
- Ensure that the contact surfaces are clean when using the sealing cone.

Accessories
- Tie Rod Wrench (36) for one-man tie point operations from one side of the formwork.
- Plugs (37) for closing tie holes which are not required.

(Fig. A5.03)

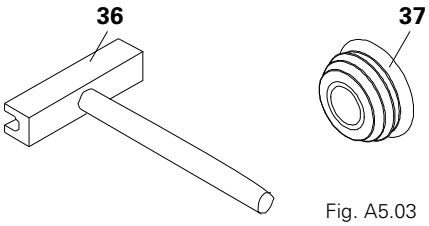

Fig. A5.03

Due to their conical shape, tie holes in the panels which are filled with concrete can be freed with a hammer blow.
(Fig. A5.04)

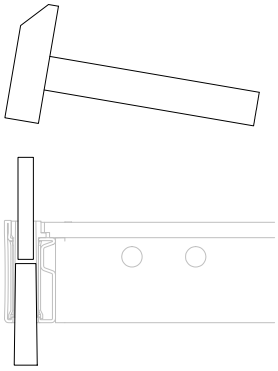

Fig. A5.04

Inclined anchorage with DW 15

- Secure panel against lifting!
- Inclined anchorage is possible on both verticallly and horizontally-positioned panels.

The conical-shaped tie hole allows inclined anchorage on all sides of up to 3°. (Fig. A5.05)

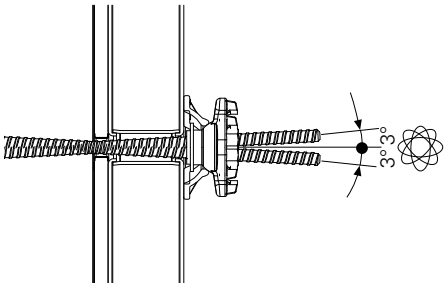

Fig. A5.05

This results in additional areas of application:

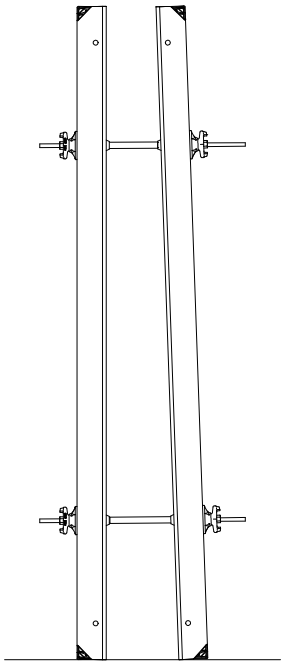

Inclined on one side
max. 3°

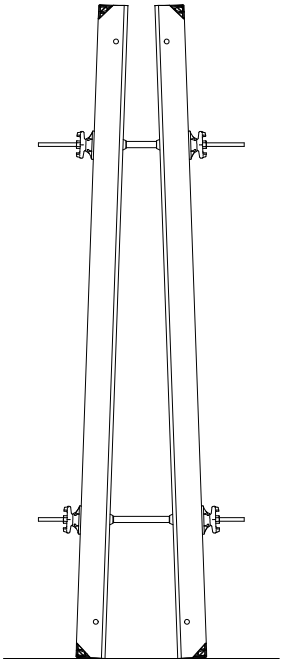

Inclined on both sides
max. 2 x 3°

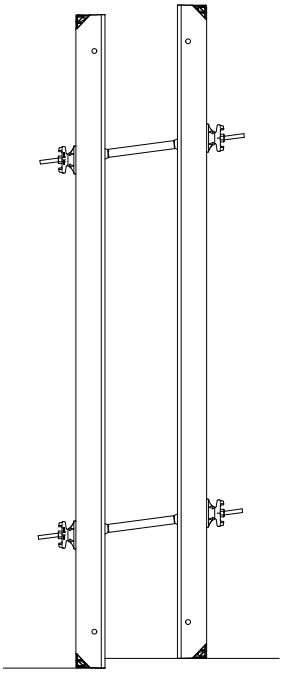

Height offset
max. 1 cm per 10 cm of wall thickness

A6 Push-Pull Props
Maximum widths of influence for push-pull props and kicker braces

PERI

Standard Application

		Formwork Height h [m] System 1						Formwork Height h [m] System 2			
		3,00	4,00	5,00	6,00	7,00	8,00	9,00	10,00	11,00	12,00
Permissible Width of Influence [m]	**EB_{ref}**	**4,41**	**3,42**	**2,69**	**2,22**	**2,02**	**1,74**	**2,45**	**2,07**	**1,80**	**1,52**
actual push-pull prop load [kN]	**F_{RS1}**	11,5	11,5	11,5	11,5	11,5	11,5	11,5	11,0	11,5	11,5
	F_{RS2}							10,9	11,5	11,2	10,5
actual kicker brace load [kN]	**F_{AV}**	2,7	2,9	2,8	2,7	3,2	3,5	4,2	3,6	3,4	3,1
Base Plate resulting force [kN]	①	13,7	13,7	13,5	13,4	13,7	13,9	11,5	11,0	11,5	11,5
	②							14,2	14,3	13,7	12,8
Base Plate resulting angle of attack [°]	①	52,4	51,1	51,1	51,1	49,4	48,2	60,0	60,0	60,0	60,0
	②							47,9	49,8	49,9	49,8
lifting force VWind [kN/m]		2,5	3,1	3,9	4,7	5,1	5,9	8,4	9,9	11,4	13,0
x = Distance of base plate from rear edge of formwork [m]	**x_1**	1,2	1,6	2,0	2,4	3,0	3,6	4,2	4,7	5,1	5,5
	x_2							2,6	2,6	2,8	3,0
y = Top connection point from top of formwork [m]	**y_1**	1,0	1,2	1,5	1,8	1,8	1,8	1,5	1,8	2,1	2,4
	y_2							4,5	5,5	6,2	6,9
q(z=h) = q_h [kN/m²]		0,59	0,59	0,59	0,59	0,59	0,61	0,64	0,66	0,69	0,71

Load assumptions:
- Wind loads according to DIN 1055-4:2005-03 w = q(z) x c_p x κ [kN/m²]
- Inland, Wind Load Zone 2
- Applied pressure coefficient c_p = 1.8 (see Graphic, below)
- Formwork in vertical position on ground
- Service life factor κ = 0.6
- q(z) = peak velocity pressure
- Inclination of the push-pull prop to the horizontal 60°
- Values are characteristic values

Note:
Anti-lift off protection is provided if the lifting force
$F_A = 1{,}5 \times V_{Wind} - 0.9 \times G \times h > 0$
G = surface area weight of the formwork including platforms.

In the end area L_E, the following c_p values or wind loads are assumed:
L/h ≤ 3: $c_{p,\,End}$ = 2.3*
L/h = 5: $c_{p,\,End}$ = 2.9*
L/h ≥ 10: $c_{p,\,End}$ = 3.4*
L_E = length of end area (0.3 x h)
h = formwork height
L = formwork length

*intermediate values are interpolated

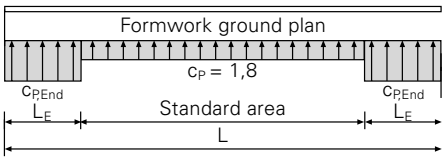

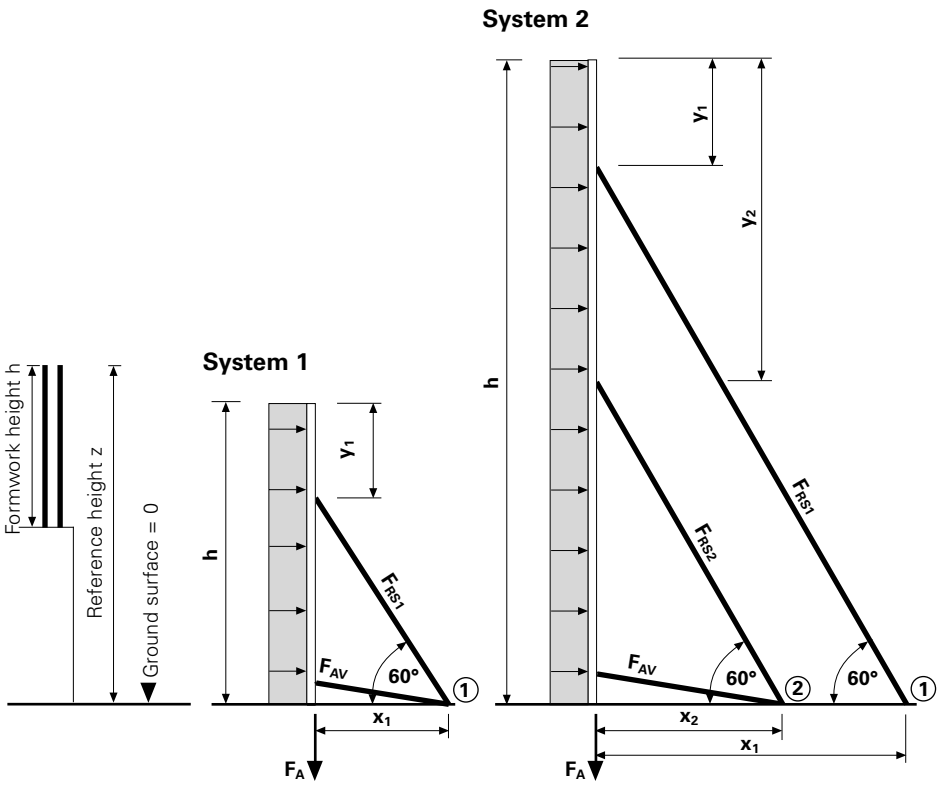

Brace Connector TRIO

Push-pull-props and kickers are attached to the panel with the Brace Connector TRIO. Connecting to both horizontal and vertical panel struts is possible.
(Fig. A6.01, A6.02)

1. Attach the Brace Connector (41) to the panel strut (10.3) so that the hook tie (41.1) is linked into a connecting hole (10.4).
2. Tighten Brace Connector by means of a Triple Wingnut (41.2).

(Fig. A6.01, A6.02)

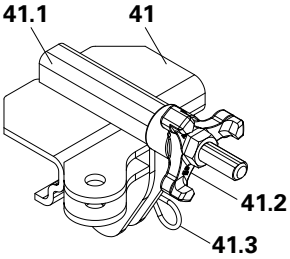

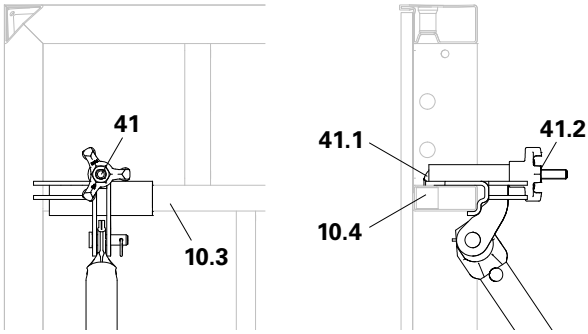

Fig. A6.01

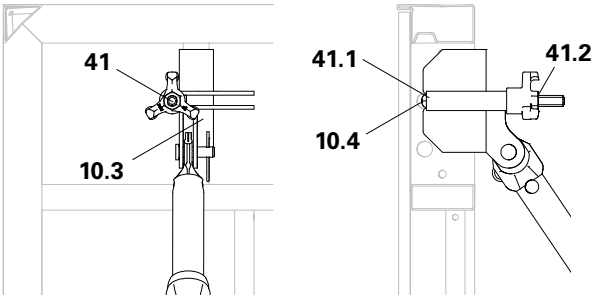

Fig. A6.02

Push-Pull Props and Kickers
(Fig. A6.03)

1. Attach push-pull prop or kicker with pin and cotter pin (41.3) to the Brace Connector TRIO. (Fig. A6.03a)
2. Mount Base Plate, e.g. with PERI anchor bolts 14/20 x 130 or similar (42). (Fig. A6.03b)

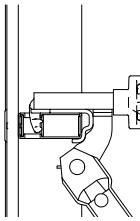

Fig. A6.03a

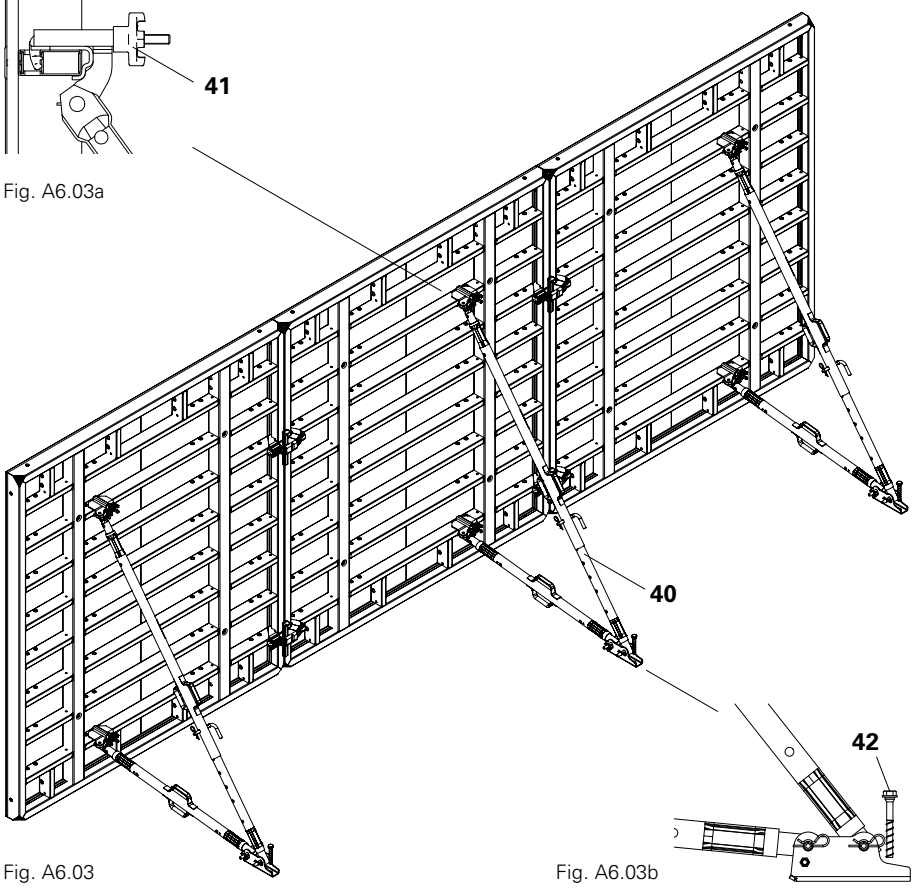

Fig. A6.03

Fig. A6.03b

Right-Angled Corners

Wall thicknesses from 18 cm to 40 cm can be continuously formed.
(Fig. A7.01)

- Wall thickness 30 cm without adjustment
- Wall thickness < 30 cm with adjustment on the inside
- Wall thickness > 30 cm with adjustment on the outside

Adjustment takes place with Wall Thickness Compensator WDA (18) or compensation (50) supplied by the contractor.

For the number of alignment couplers for other panel heights, see TRIO poster.

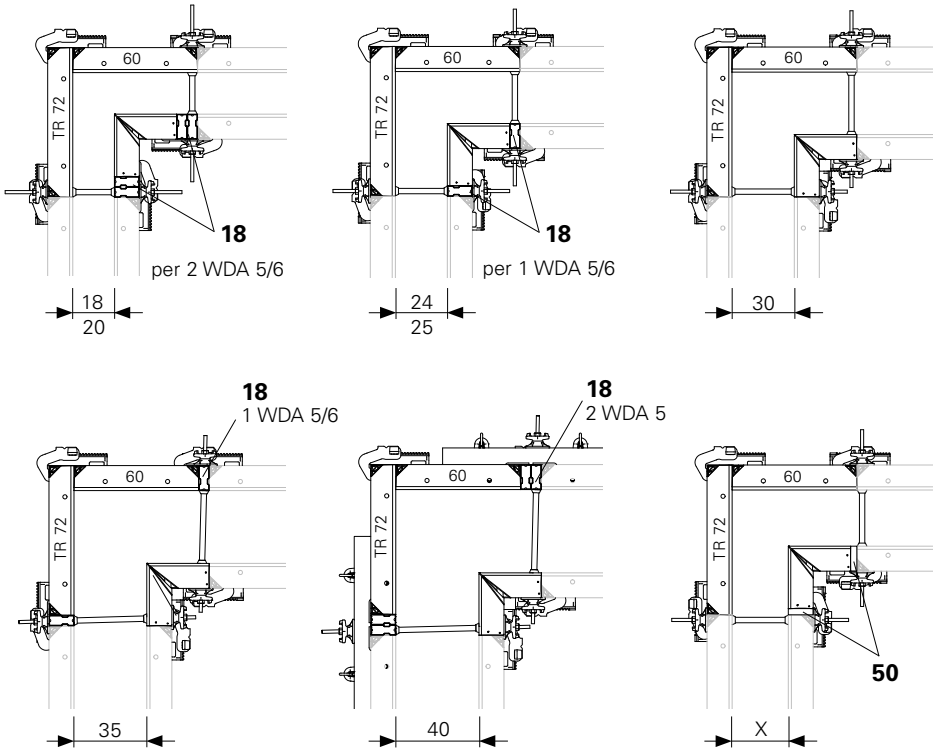

Fig. A7.01

As seen from the outside, the Panel TR 72 (12) must be positioned on the right whilst the Panel TR 60 covers the front side.
Ensure that the Alignment Couplers BFD are correctly installed. (Fig. A7.04)

External corner consisting of:
- TRIO Panel TR 60 (11)
- TRIO Panel TR 72 (12)
- Alignment Coupler BFD (20) (5 x BFD for h = 2.70 m)

(Fig. A7.02)

Internal corner consisting of:
- TRIO Inside Corner TE (13) or Inside Corner TAE (Alu)
- Alignment Coupler BFD (20) (2 x BFD for h = 2.70 m) (Fig. A7.03)
- Always transport TRIO Inside Corners in combination with the next panel. Attach Lifting Hook to the next panel (high profile)! (Fig. A7.03a)

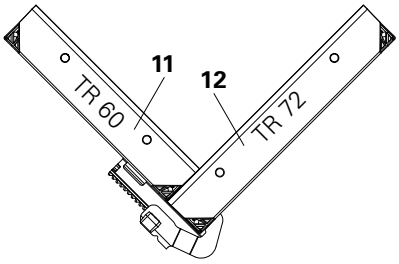

Fig. A7.04

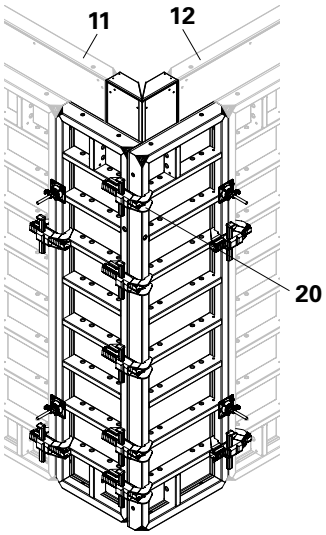

Fig. A7.02

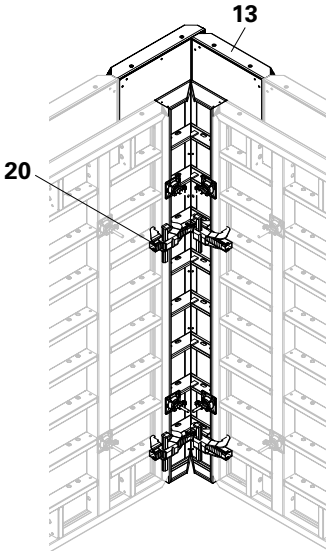

Fig. A7.03

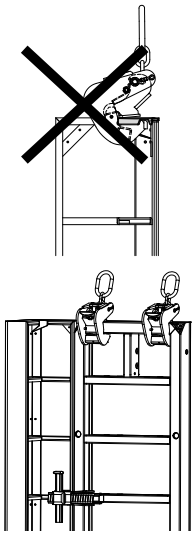

Fig. A7.03a

Right-Angled Corners

Wall thicknesses of 60 cm and 80 cm.
Perm. fresh concrete pressure
60 kN/m².

Wal thickness 60 cm
Panel connection for h = 2.70 m:
- 3 x Alignment Coupler BFD (20) for a length L of 2.25 m per panel joint
- Compensation Waler TAR 85 (23)

(Fig. A7.05)

Fig. A7.05

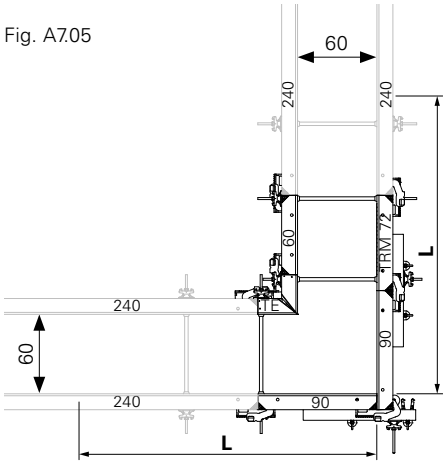

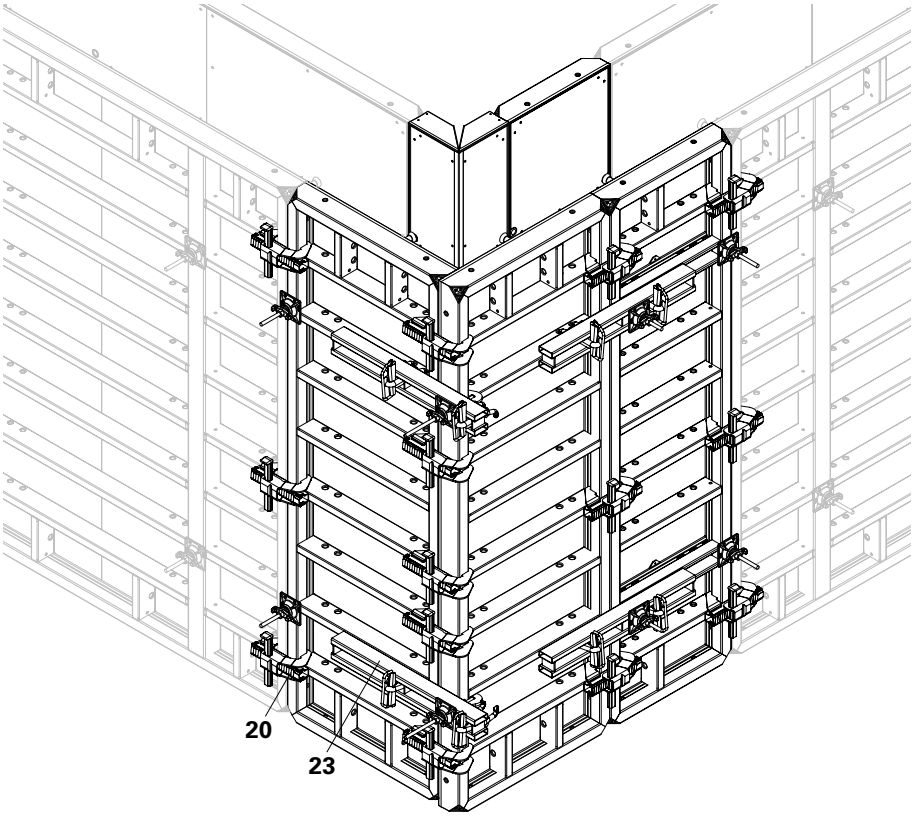

Wall thickness 80 cm
Panel connection for h = 2.70 m:
- 3 x Alignment Coupler BFD (20) for a length L of 3.0 m per panel joint
- Universal Waler 245 (26) with Waler Stop (27) and Tie Rod Cylinder Yoke (28)

(Fig. A7.06)

Fig. A7.06

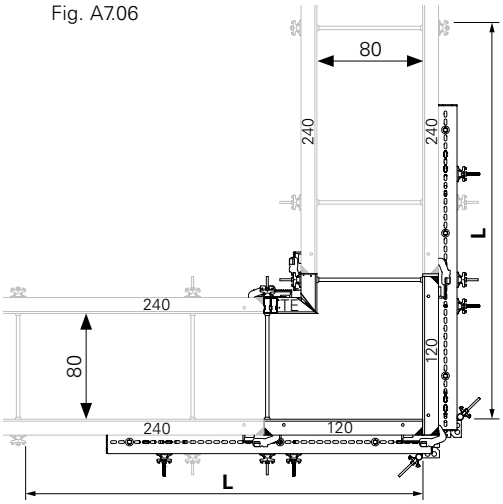

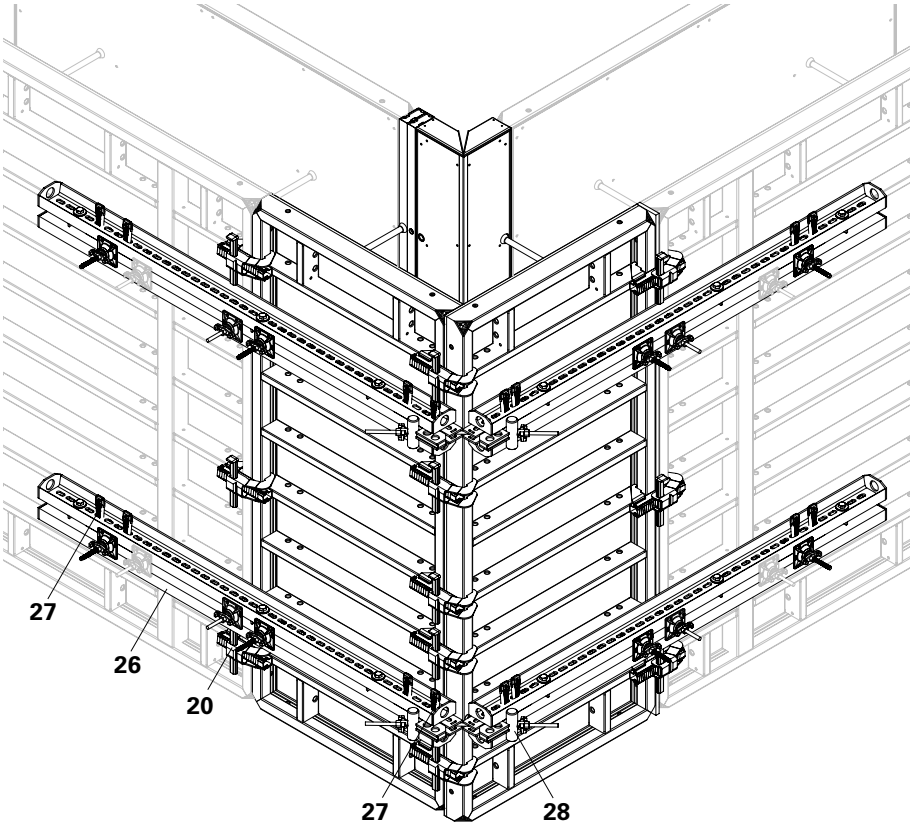

Obtuse and Acute-Angled Corners

With the TRIO Articulated Corner TGE (14), angles of 75° and more are formed. (Fig. A8.01)

Alignment Couplers BFD are to be mounted from bottom to top on both external and internal formwork.
For the number of alignment couplers for other panel heights, see TRIO poster.

Fig. A8.01

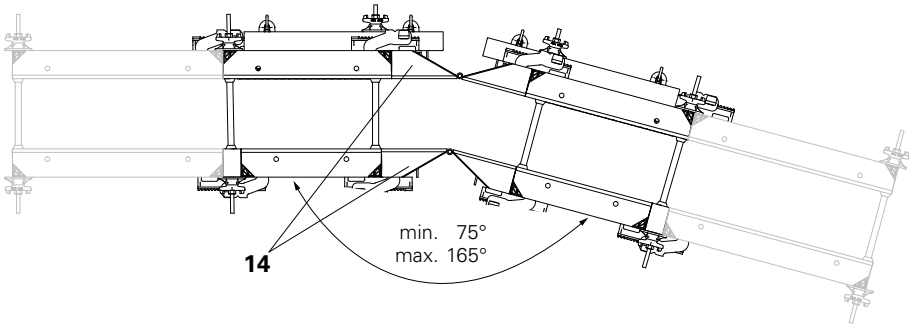

External Formwork
The external formwork is stabilised with Compensation Waler TAR 85 (23).
(Fig. A8.02)

Internal Formwork
Only Alignment Couplers BFD are required on the internal formwork.
(Fig. A8.03)

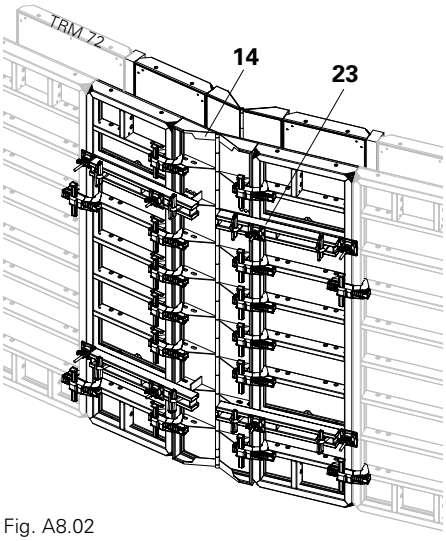

Fig. A8.02

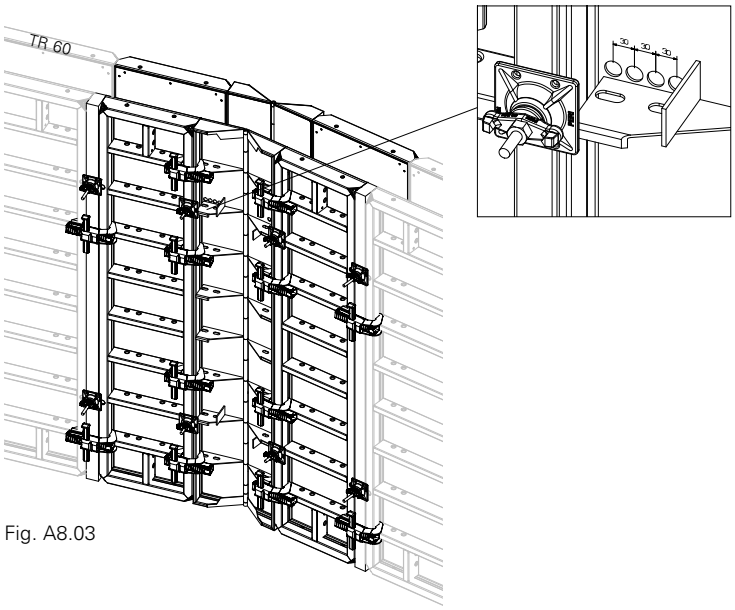

Fig. A8.03

Table
Required compensation x [cm]

☐ Inside compensation
■ Outside compensation

Angle	Wall thickness [cm]					
α	20	25	30	35	36	40
165°	9,2	8,5	7,8	7,2	7,1	6,5
150°	6,2	4,9	3,5	2,2	1,9	0,9
135°	3,1	1,0	1,1	3,2	3,6	5,2
120°	0,5	3,4	6,2	9,1	9,7	12,0
105°	4,6	8,4	5,8	1,9	1,5	1,9
75°	13,8	7,3	0,8	5,7	7,0	12,2

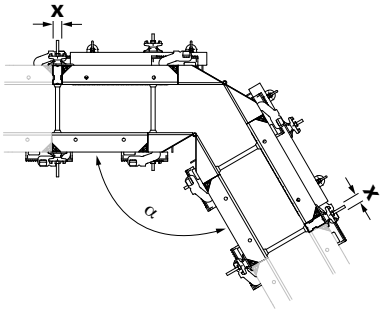

90° T-junction

Wall thicknesses from 18 cm to 60 cm can be continuously formed.
(Fig. A9.01)

- Wall thickness 30 cm without adjustment
- Wall thickness < 30 cm with adjustment on the inside
- Wall thickness > 30 cm with adjustment on the outside

Adjustment takes place with Wall Thickness Compensator WDA (18) or compensation (50) supplied by the contractor.

Assembly

- T-junctions are formed with the Internal Corner TE (13).
- The straight wall positioned opposite is formed with one TRIO Panel TR 90 (15) or TR 120 (16).

(Fig. A9.01)

With two Compensations (WDA), mount one WDA right and left of the panel respectively.

Fig. A9.01

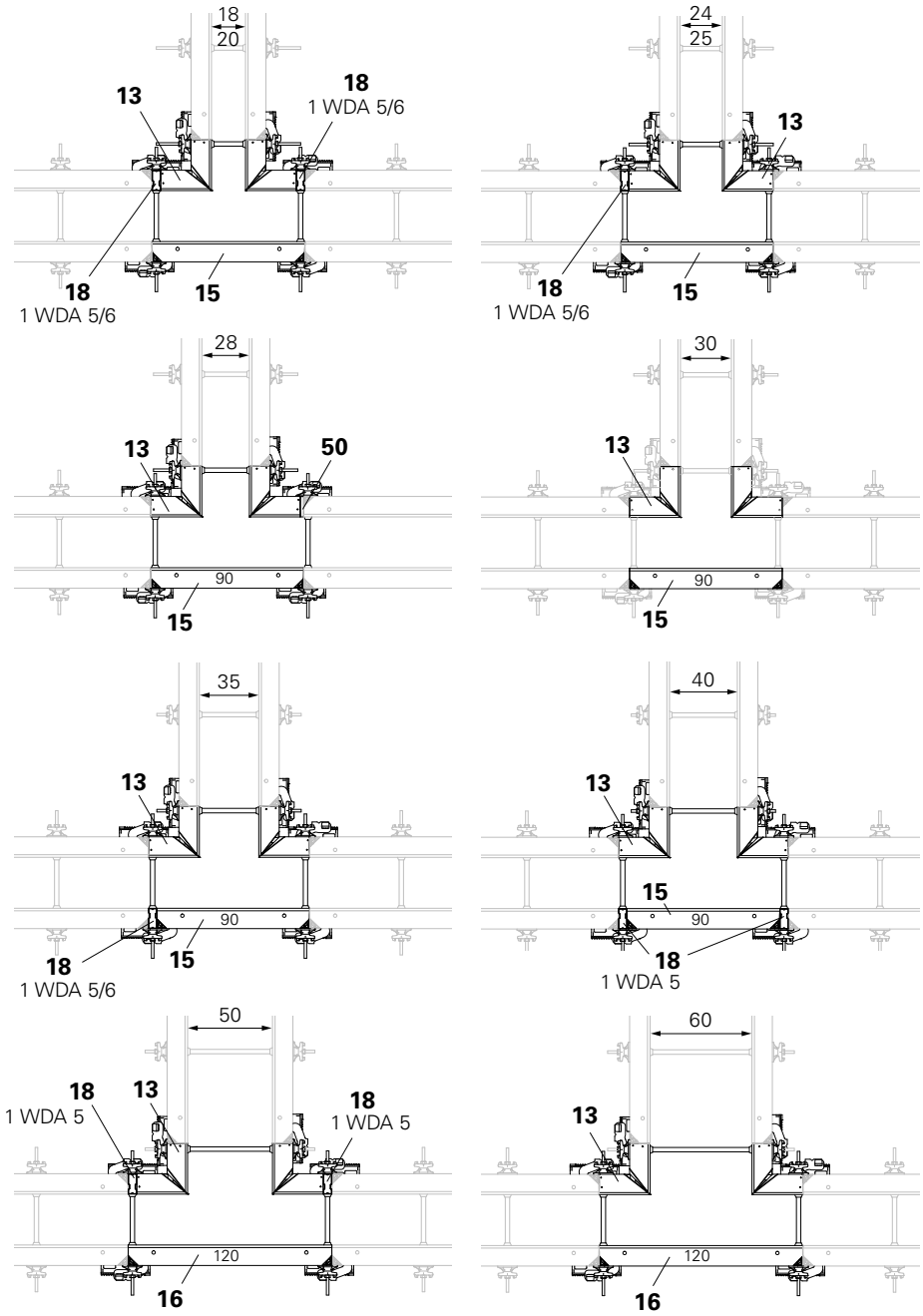

Pilaster

For the arrangement and number of horizontal Walers 85 (24, 25) and tie sets (55), see Stopend Formwork with Timbers.
(Fig. A9.02)

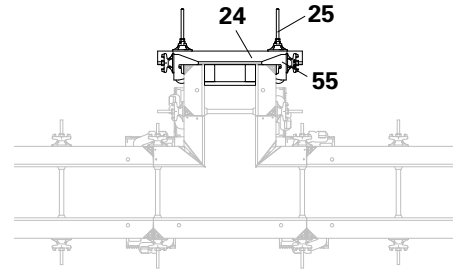

Fig. A9.02

Obtuse-Angled Wall Connection

With Panel TR 270 x 240.
(Fig. A9.03)

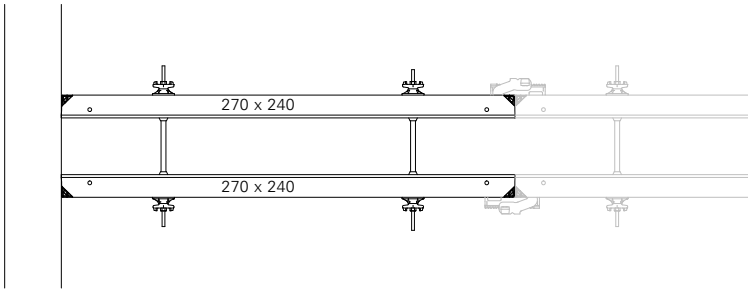

Fig. A9.03

With Multi-Purpose Panel TRM 72.
(Fig. A9.04)

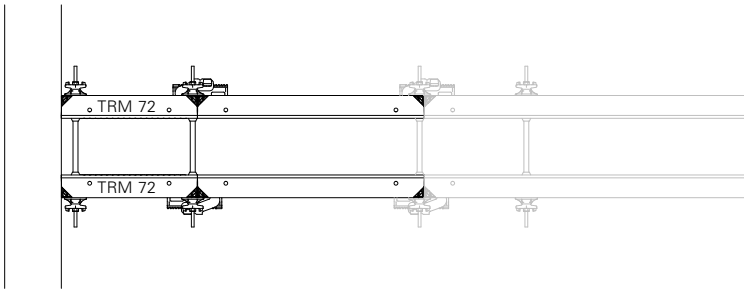

Fig. A9.04

With Wall Thickness Compensator WDA (18) or Timbers.
(Fig. A9.05)

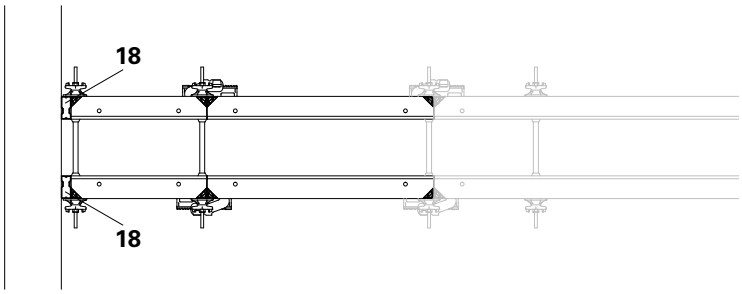

Fig. A9.05

With Cam Nut DW 15 (19).
(Fig. A9.06)

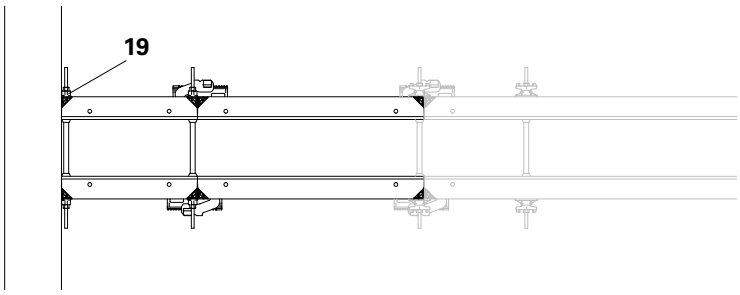

Fig. A9.06

Wall Offsets

Example: wall thickness 30 cm

Wall offset ≤ 20 cm
- Compensation Waler TAR 85 (23)
- Hook Tie DW 15/400 (29)
- Compensation provided by the contractor (50)
- Filler Plate (51)
- Panel TR 30 (17)
- Additional BFD (20) from 12 cm

(Fig. A10.01)

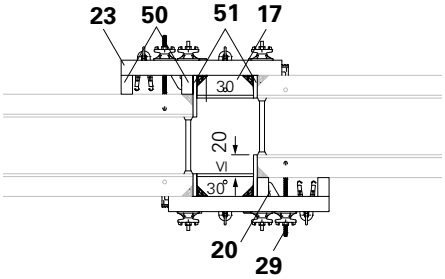

Fig. A10.01

Wall offset 21 – 80 cm

Consisting of inside and outside corners.
- Panel TR 60 (11)
- Multi-Purpose Panel TRM 72 (12)
- TRIO Inside Corner TE (13)
- Compensation Waler TAR 85 (23)
- Stopend Tie (25)
- Compensation provided by the contractor (50)

(Fig. A10.02)

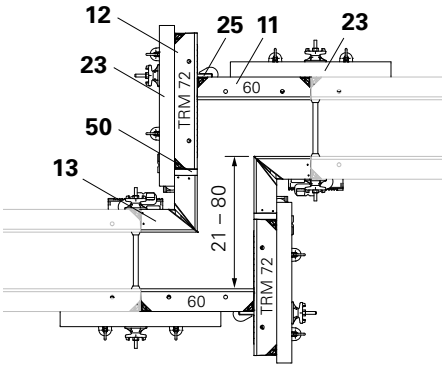

Fig. A10.02

Wall offset 81 – 90 cm

Consisting of inside and outside corners.
- Panel TR 60 (11)
- Multi-Purpose Panel TRM 72 (12)
- TRIO Inside Corner TE (13)
- Compensation Waler TAR 85 (23)
- Stopend Tie (25)
- Compensation provided by the contractor (50)
- Additional tie points (30)

(Fig. A10.03)

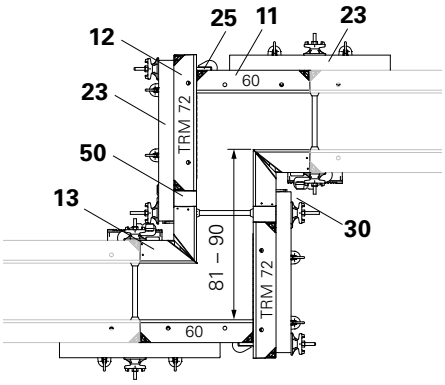

Fig. A10.03

Wall offset 91 – 100 cm

Consisting of inside and outside corners.
- Panel TR 60 (11)
- Multi-Purpose Panel TRM 72 (12)
- TRIO Inside Corner TE (13)
- Alignment Coupler BFD (20)
- Compensation provided by the contractor (50)

(Fig. A10.04)

Locating board facilitates the positioning of the formwork panel.

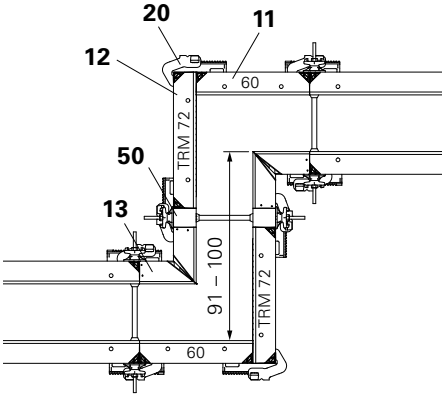

Fig. A10.04

Height Offsets

For height offsets: depending on the offset, the Alignment Couplers BFD (20) are mounted alternately on the frame struts of the right and left panels. (Fig. A10.05)

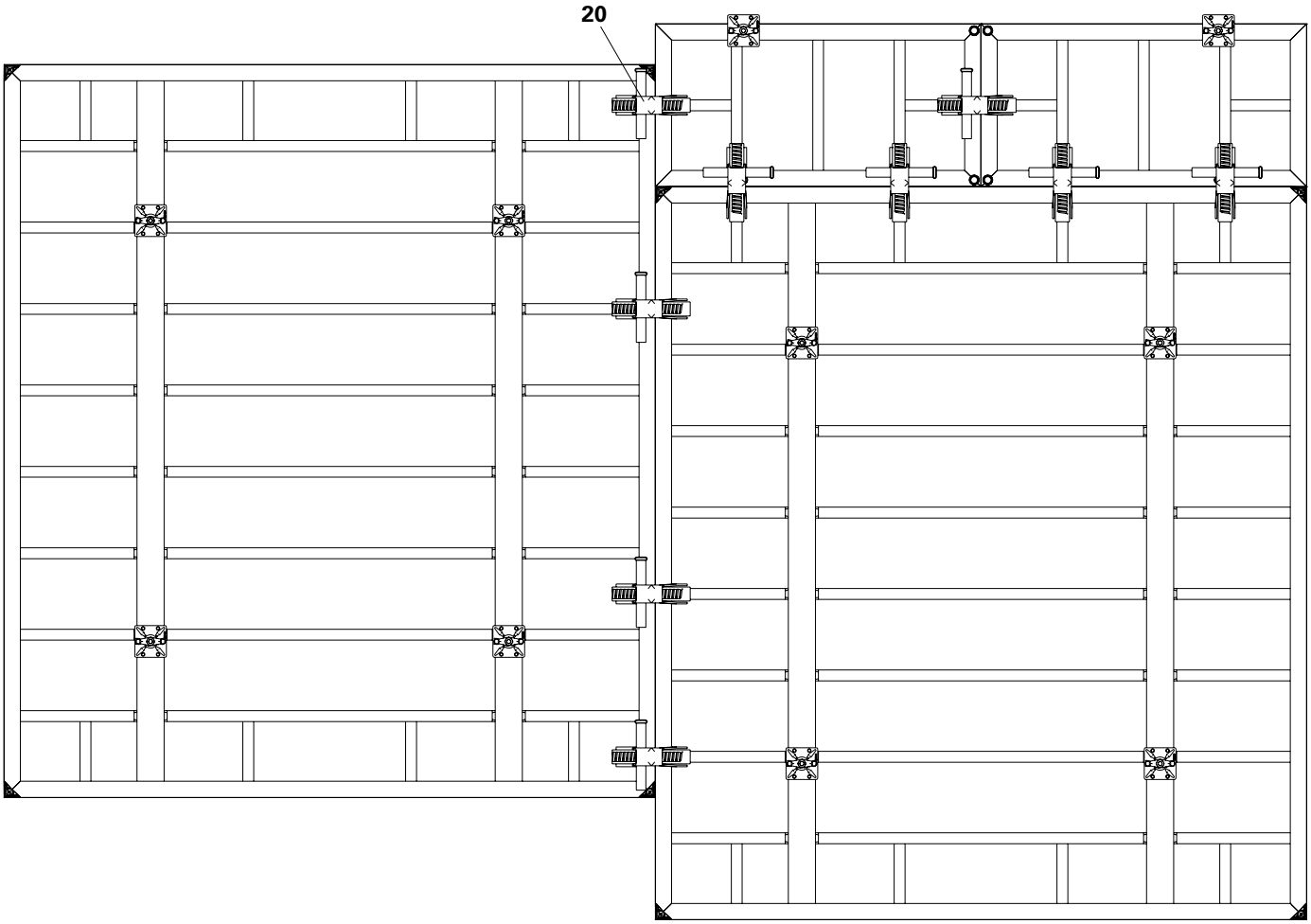

Fig. A10.05

With timber supplied by the contractor

Compensations up to max. 10 cm
Length compensation takes place using timber which has been cut to size (50).
(Fig. A11.01)

- With compensations > 2.5 cm, anchor in the middle of the timber.
- Alignment Couplers BFD (20) are to be arranged as for standard panel joints.
- The Wingnut Pivot Plate must overlap the frame of the adjoining panel by at least 1 cm.

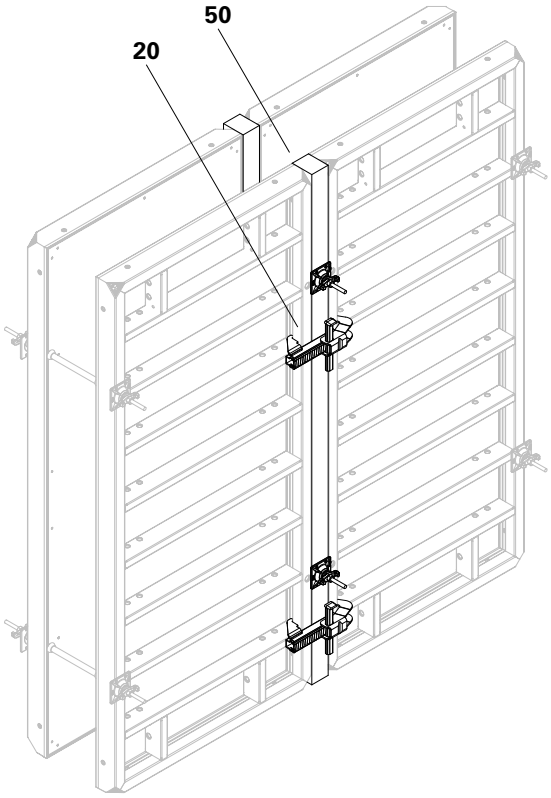

Fig. A11.01

With TRIO Filler Plate LA

Compensations from 6 to 36 cm
With similar compensations on the opposite side, install the Compensation Waler TAR 85 (23) by means of the hooks from above.
(Fig. A11.02)
The top tie hole (a) is used for anchoring.
(Fig. A11.02a)

Always anchor through the length compensation (52)!

The bottom Compensation Waler TAR 85 (23) must be mounted in the strut with the hooks from below if a TRIO panel is installed on the opposite side, e.g. Multi-Purpose Panel TRM 72.
(Fig. A11.02b)

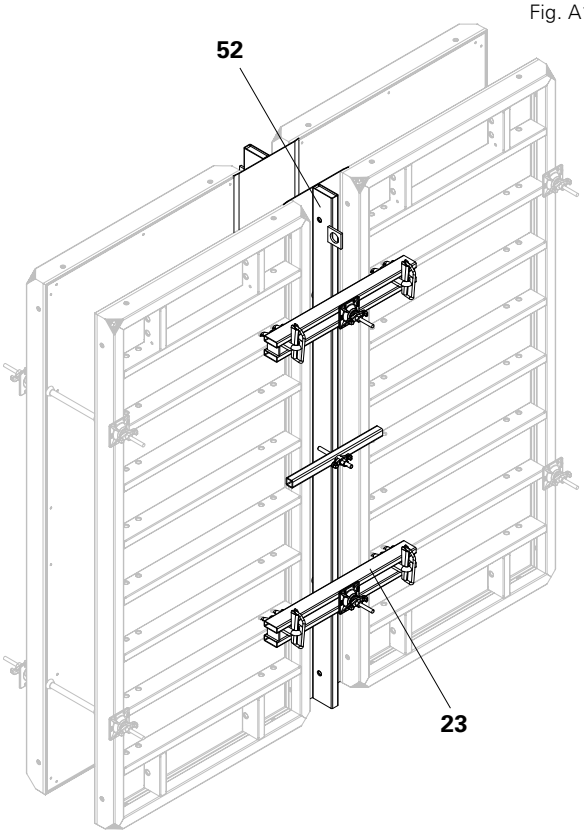

Fig. A11.02

Fig. A11.02a

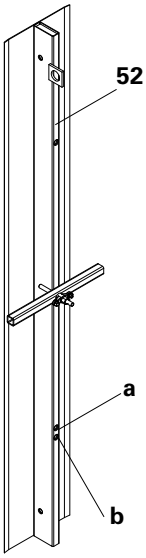

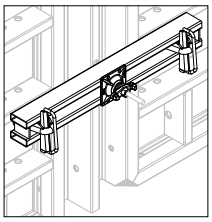

Fig. A11.02b

With TRIO Filler Profile TPP

Compensations from 20 to 36 cm
Consisting of:
– Filler Profile (53) (2x)
– Plywood filler 21 mm (51)
(Fig. A11.03b)

Anchoring is to take place so that anchor forces are transferred in the middle through the Compensation Waler TAR 85 (23) to the adjacent panel.
(Fig. A11.03a)

Installation
(Fig. A11.03)

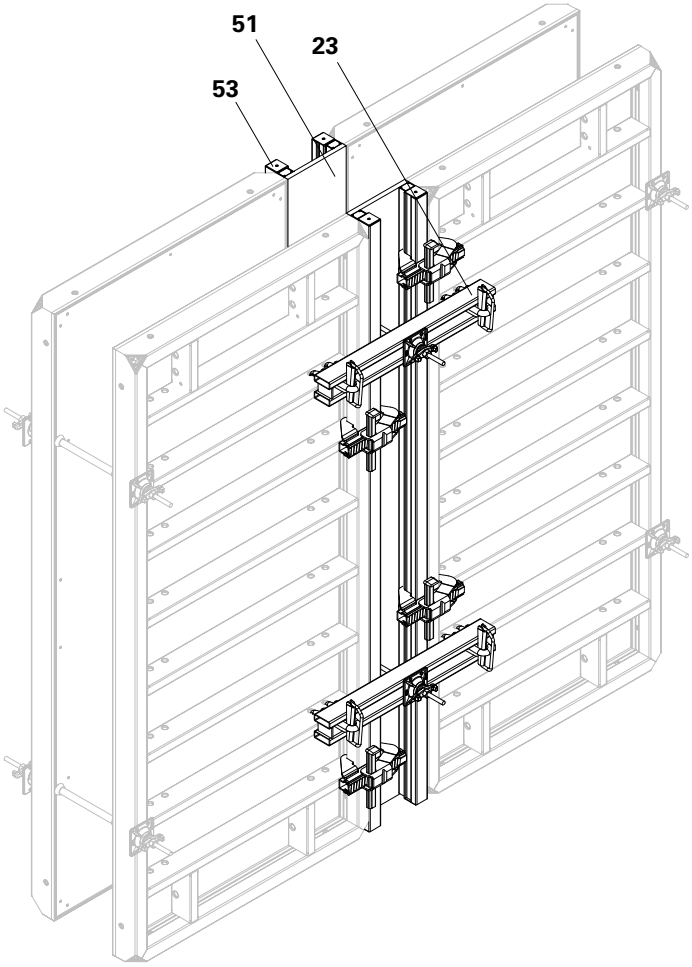

Fig. A11.03

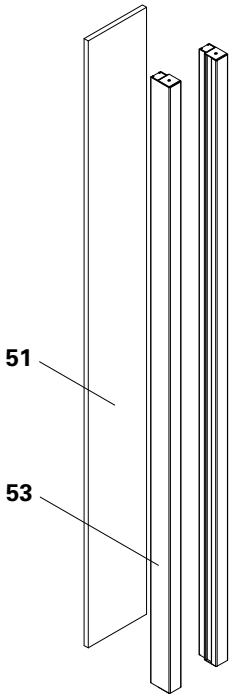

Fig. A11.03b

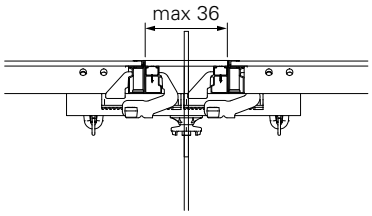

Fig. A11.03a

With Stopend Panel TR 24

For wall thickness 24 cm
(Fig. A12.01)

- The Stopend Panel TR 24 (54) can also be used as a wall panel.
- The Panel TR 30 can be used as stopend panel for wall thickness 30 cm. (without illustration)

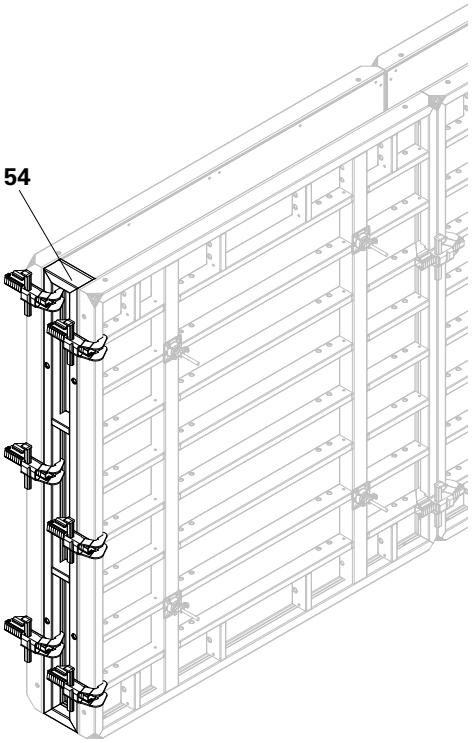

Fig. A12.01

With timber and filler plywood

For all wall thicknesses
The concrete pressure from the stopend formwork is transferred with the TRIO Stopend Tie TS and Waler 85 to the TRIO panels.

Use with panel width < 2.40 m at the end of the wall (Fig. A12.02).
Required components:
- 3 x Waler 85 (24)
- 6 x Stopend Tie TS (25) with Wingnut Pivot Plate DW 15
- 6 x Top Tie Bracket DAH (55) with tie set

For use with panel width = 2.40 m at the wall end (without illustration).
Required components:
- 3 x Waler 85 (24)
- 6 x Stopend Tie TS (25) with Wingnut Pivot Plate DW 15.

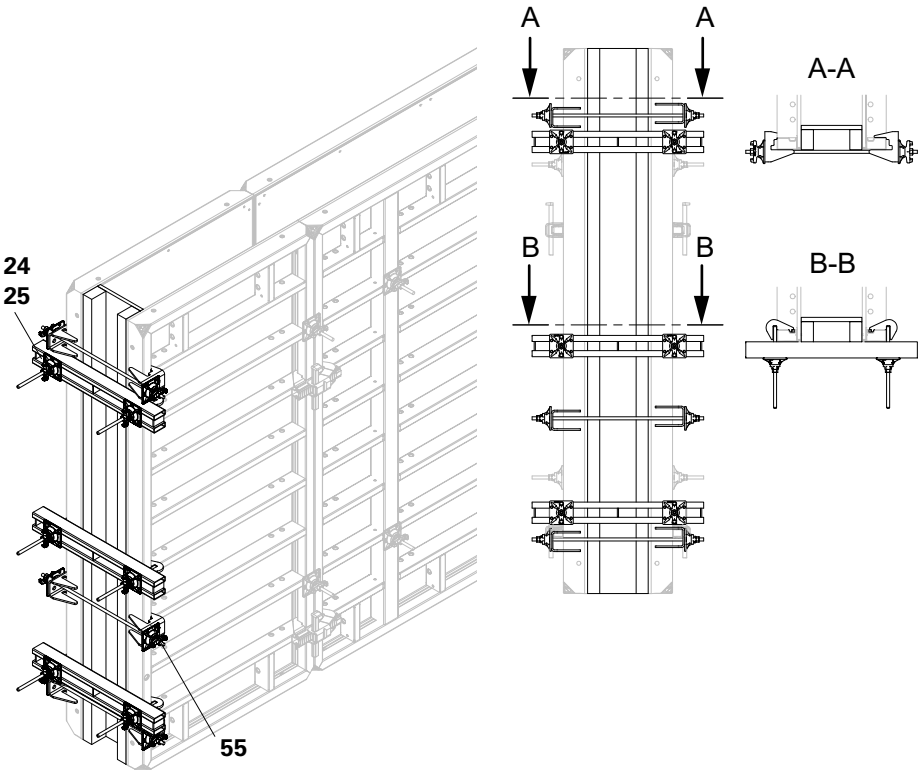

Fig. A12.02

Stopend Panel without Water Stop

H = 2.70 m and 1.20 m.

Required components:

– 2 x Outside Pieces AT 3/AT 5 (56) for approx. 2.5 cm/5 cm concrete cover
– 1 x Centre Piece MT (57)

(Fig. A12.03)

Assembly

1. Position first side of the formwork.
2. Fix first Outside Piece AT (56) to the placing formwork by means of Alignment Coupler BFD (20).
3. Install first row of reinforcement.
4. Place Centre Piece MT (57) in position.
5. Install second row of reinforcement.
6. Position closing formwork.
7. Attach second Outside Piece AT (56) to Centre Piece MT.
8. Secure with Alignment Coupler BFD (20).

(Fig. A12.04)

The rubber lip (56.1) of the Outside Piece AT allows a reinforcement thickness of 16 mm.

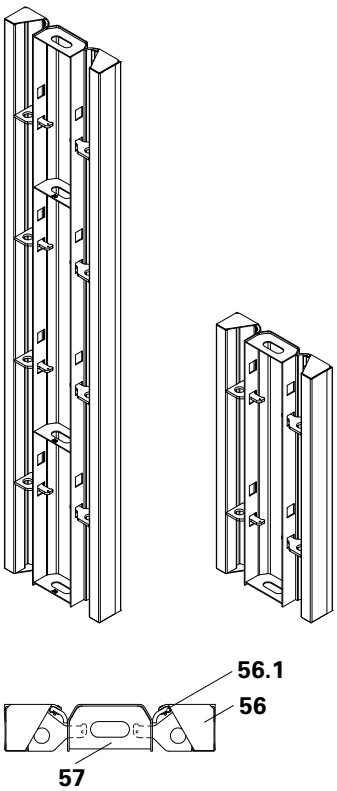

Fig. A12.03

Concrete cover c:

$$c = \frac{d - b}{2} - Ø \text{ Reinforcement}$$

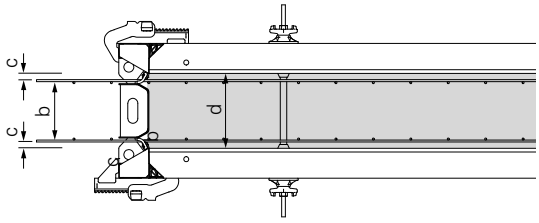

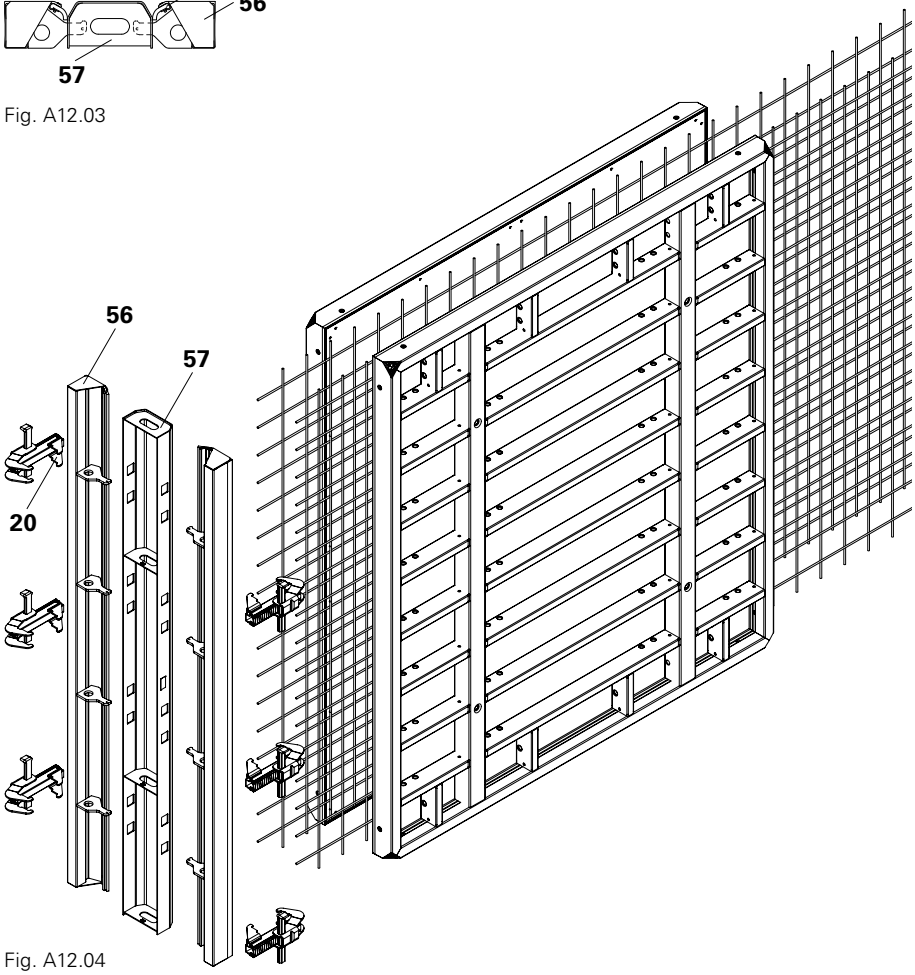

Fig. A12.04

Stopend Panel with Water Stop

H = 2.70 m and 1.20 m.

Required components:
- 2 x Outside Pieces AT 3 (56) for approx. 2.5 cm or 2 x AT 5 for approx. 5 cm concrete cover respectively.
- 1 x Centre Piece MTF (58)

(Fig. A12.05)

Assembly
1. Position first side of the formwork.
2. Fix first Outside Piece AT (56) to the placing formwork by means of Alignment Coupler BFD (20).
3. Install first row of reinforcement.
4. Place Centre Piece MTF (58) in position and install water bar.
5. Install second row of reinforcement.
6. Position closing formwork.
7. Attach second Outside Piece AT (56) to Centre Piece MTF.
8. Secure with Alignment Coupler BFD (20).

(Fig. A12.06)

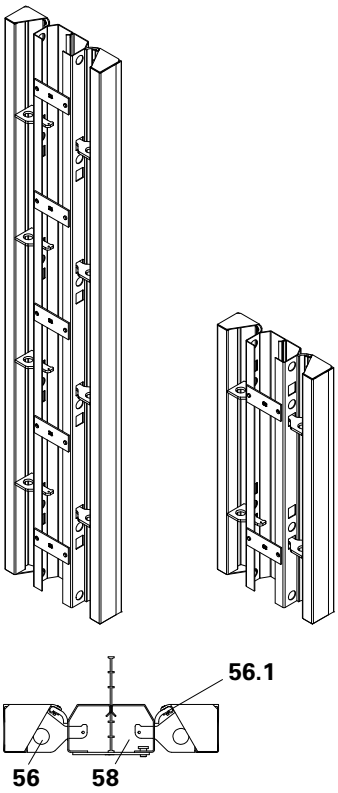

Fig. A12.05

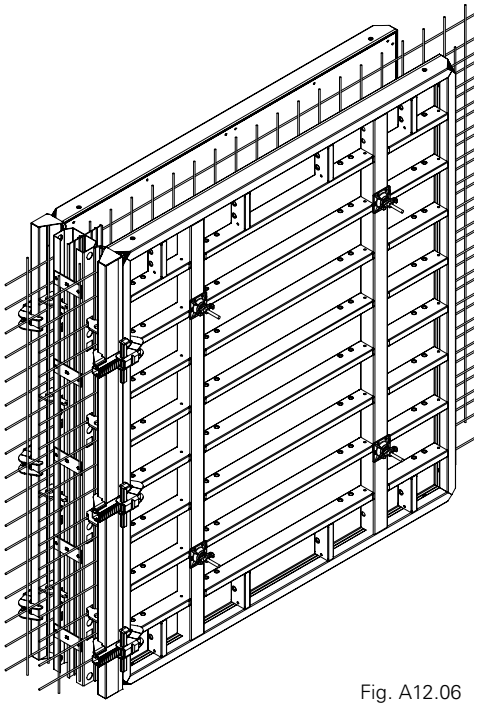

Fig. A12.06

	b [mm]	Wall thickness d [cm] Concrete cover approx. 25 mm				Concrete cover approx. 50 mm			
H = 2,70 m		20	24/25	30	35/36	24/25	30	35/36	40
AT 270x3	–	2	2	2	2				
AT 270x5	–					2	2	2	2
		without water bar				without water bar			
MT 270x20	118	1				1			
MT 270x24/25	158		1				1		
MT 270x30	218			1				1	
MT 270x35/36	268				1				1
		with water bar				with water bar			
MTF 270x20	118	1				1			
MTF 270x24/25	158		1				1		
MTF 270x30	218			1				1	
MTF 270x35/36	268				1				1
H = 1,20 m									
AT 120x3	–	2	2	2	2				
AT 120x5	–					2	2	2	2
		without water bar				without water bar			
MT 120x20	118	1				1			
MT 120x24/25	158		1				1		
MT 120x30	218			1				1	
MT 120x35/36	268				1				1
		with water bar				with water bar			
MTF 120x20	118	1				1			
MTF 120x24/25	158		1				1		
MTF 120x30	218			1				1	
MTF 120x35/36	268				1				1

Stopend Panel with Expandable Water Bar

Required components:
- 2 x Outside Pieces AT (56)
- 1 x Centre Piece MTF (58)
- 1 x filler plate (51) supplied by the contractor

(Fig. A12.07)

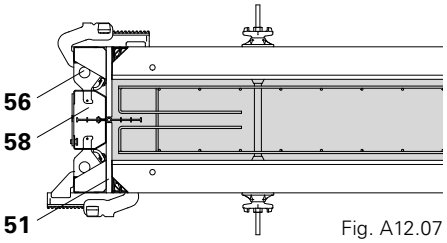

Fig. A12.07

Concreting Platform TRIO 120 x 270

Permissible load:150 kg/m²!
The load-bearing points are coloured yellow!
The concreting platform must be dismantled during temporary storage of the panel!

Pre-assembled concreting platform (60). (Fig. A13.01)

Assembly

1. Fold up guardrails (61) and secure with bolts (61.1). (Fig. A13.01)
2. Fold up suspension beam (62) until it engages. (Fig. A13.02)
3. Attach concreting platform (60) to the load-bearing points. (Fig. A13.03, A13.03a + A13.03b)

The sliding sleeve (62.1) must be at the bottom.
(Fig. A13.02)

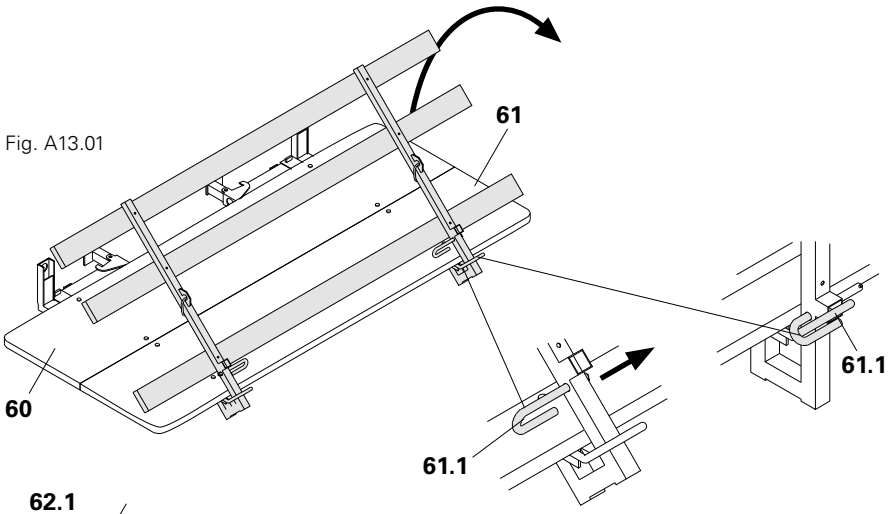

Fig. A13.01

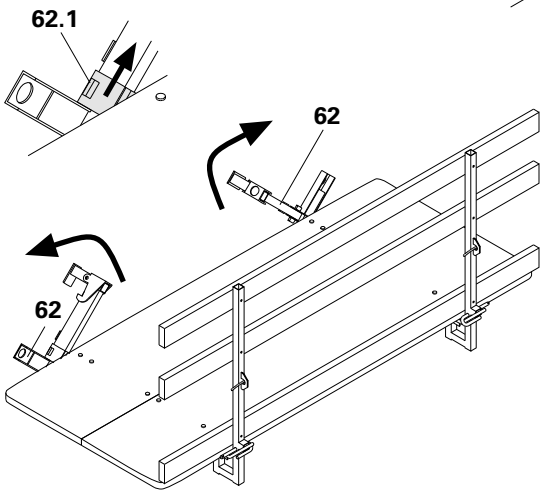

Fig. A13.02

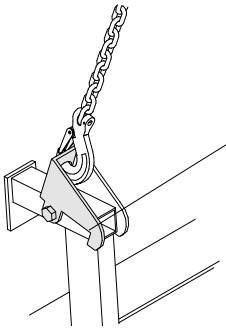
Fig. A13.03a

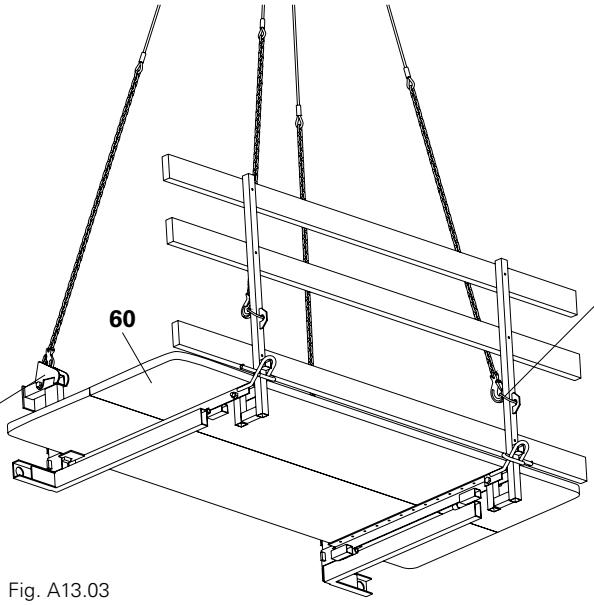

Fig. A13.03

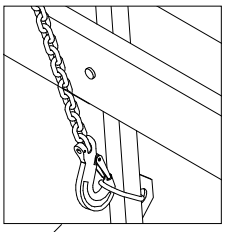
Fig. A13.03b

Assembly

4. Attach concreting platform to the top edge of the formwork by means of the suspension beam. Position from below using guide rope. (Fig. A13.04)
5. Remove 4-sling lifting gear. The retaining claw (62.2) grips the edge profile and secures. (Fig. A13.04a)
6. Attach side protection, e.g. End Guardrail Frame 55.g. End Guardrail Frame 55

Visual check is carried out on the retaining claw.

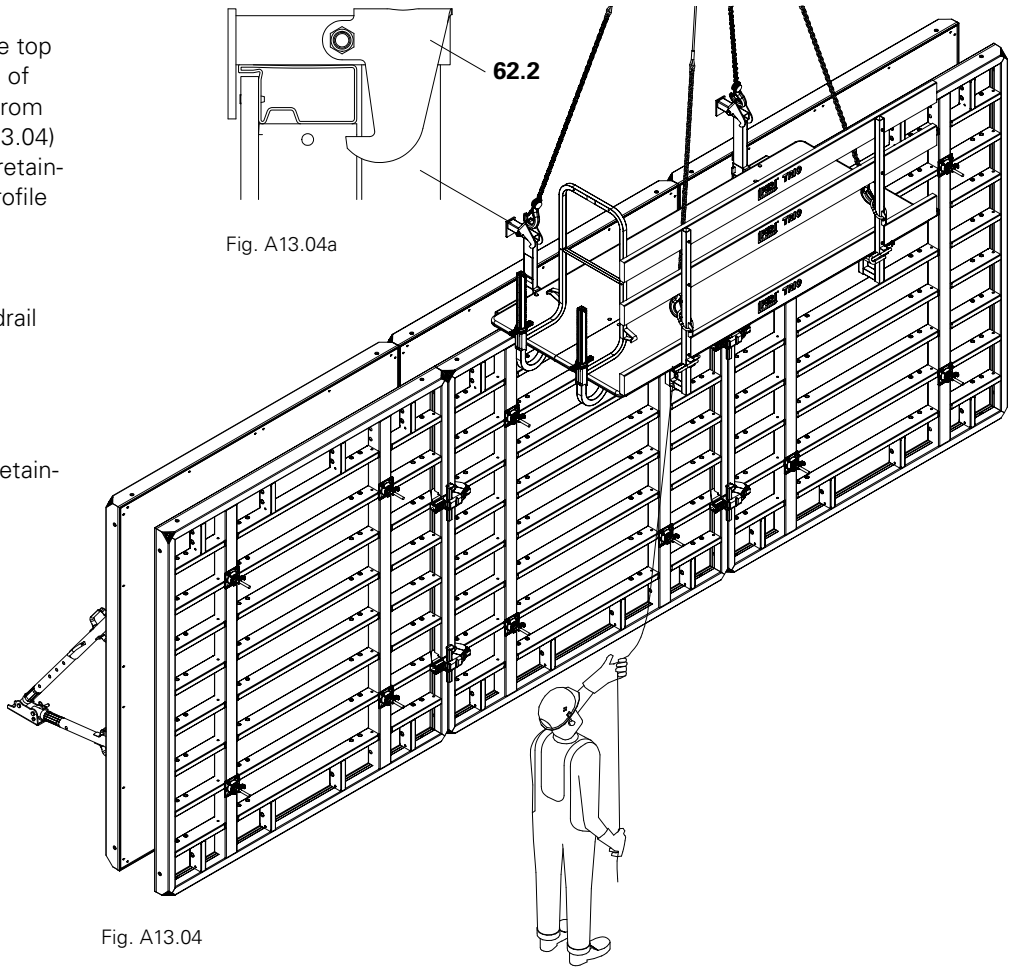

Fig. A13.04a

Fig. A13.04

Place guardrail in an inclined position

1. Remove securing pin and cotter pin (61.1).
2. Guardrail frame is placed in an inclined position to the rear, max. 15°.
3. Install securing pin and cotter pin (61.1).

Handrail frame is placed in an inclined position. (Fig. A13.05, A13.06)

Always place in an inclined position before moving with the crane!

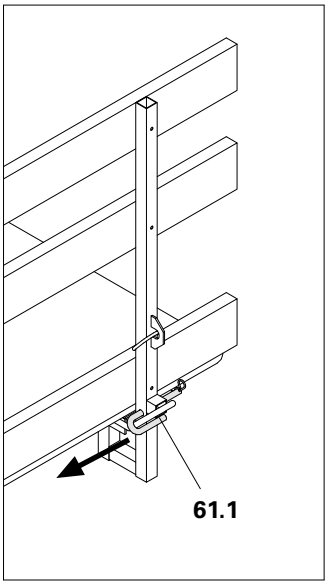

Fig. A13.05

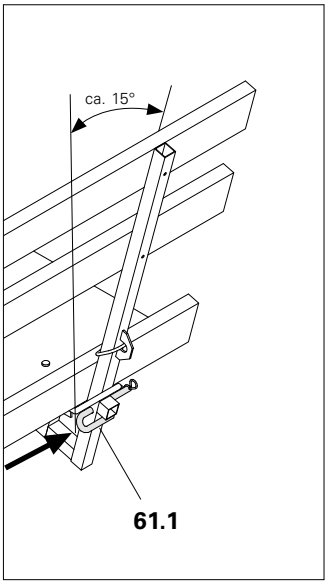

Fig. A13.06

Scaffold Brackets TRG 80 and TRG 120

Permissible load: 150 kg/m²!

A concreting scaffold unit is formed on the TRIO panels by means of the Scaffold Bracket TRG 80 and TRG 120 (63).

Assembly

1. Hook in Scaffold Brackets (63) into the connecting holes of the panel. (Fig. A13.07) This is possible on the horizontal (Fig. A13.07a) and vertical (Fig. A13.07b) panel struts.
2. Install planking from below over the complete width of the brackets and secure in position.
3. Install guardrails and secure.
4. Attach side protection, e.g. FTF End Guardrail Frame (64). (Fig. A13.08)

With extended formwork units, the working scaffold is mounted as part of the pre-assembly process.

Visual check of the mounting equipment.

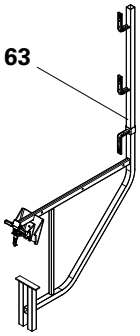

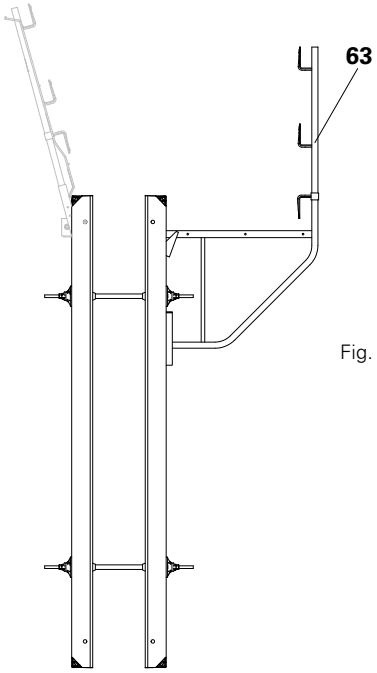

Fig. A13.07

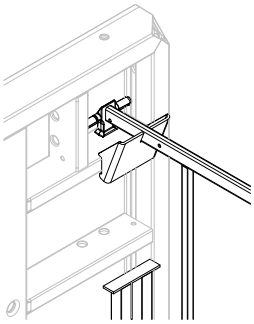

Fig. A13.07a

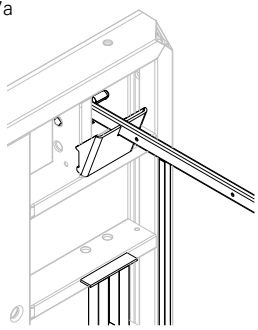

Fig. A13.07b

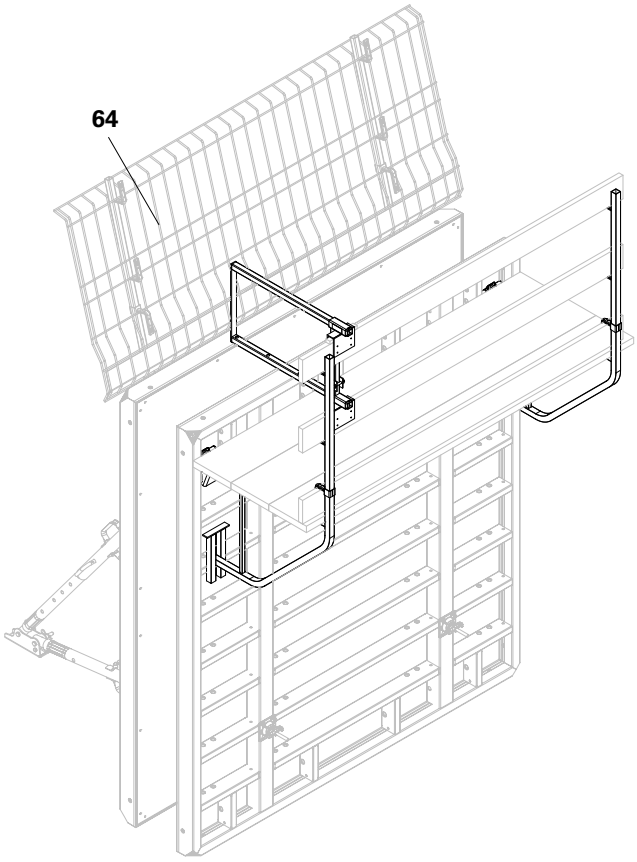

Fig. A13.08

Guardrail Post Holder TRIO

Assembly is carried out on the horizontally-positioned panel!
Connection is only possible to vertical panel struts!

Guardrails are mounted using the TRIO Guardrail Post Holders on the opposite side of the concreting scaffold.

Required components:
– Guardrail Post Holder TRIO (65)
– Handrail Post HSGP (66)
(Fig. A13.09)

Assembly
1. Hook in Guardrail Post Holder TRIO (65) into the connecting holes of the panel´s vertical struts.
2. Secure with cotter pins.
3. Insert Handrail Post HSGP (66).
4. Install guardrails and secure.
5. Erect with the crane.

(Fig. A13.10)

When erecting the panel, make sure that the guardrails are not damaged by the lifting gear.
With extended formwork units, the guardrails are mounted as part of the pre-assembly process.
When striking, do not place the panel on the Guardrail Post Holder TRIO (65).

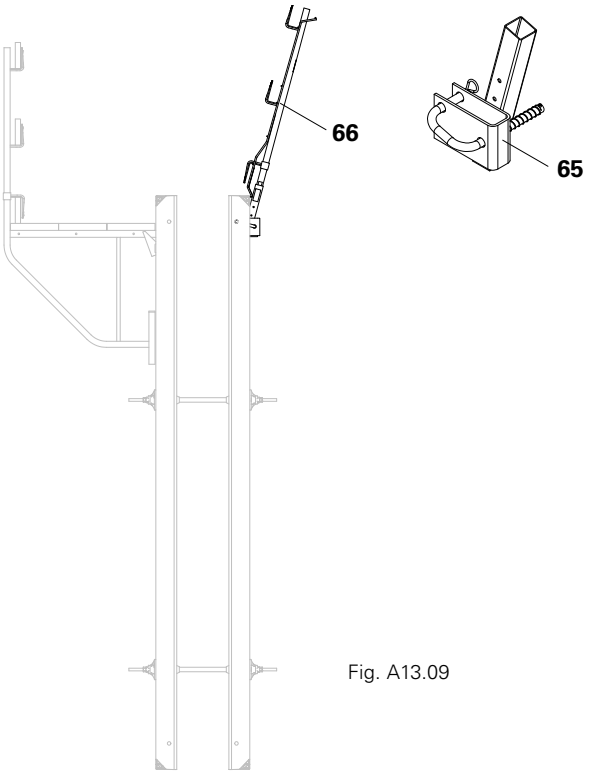

Fig. A13.09

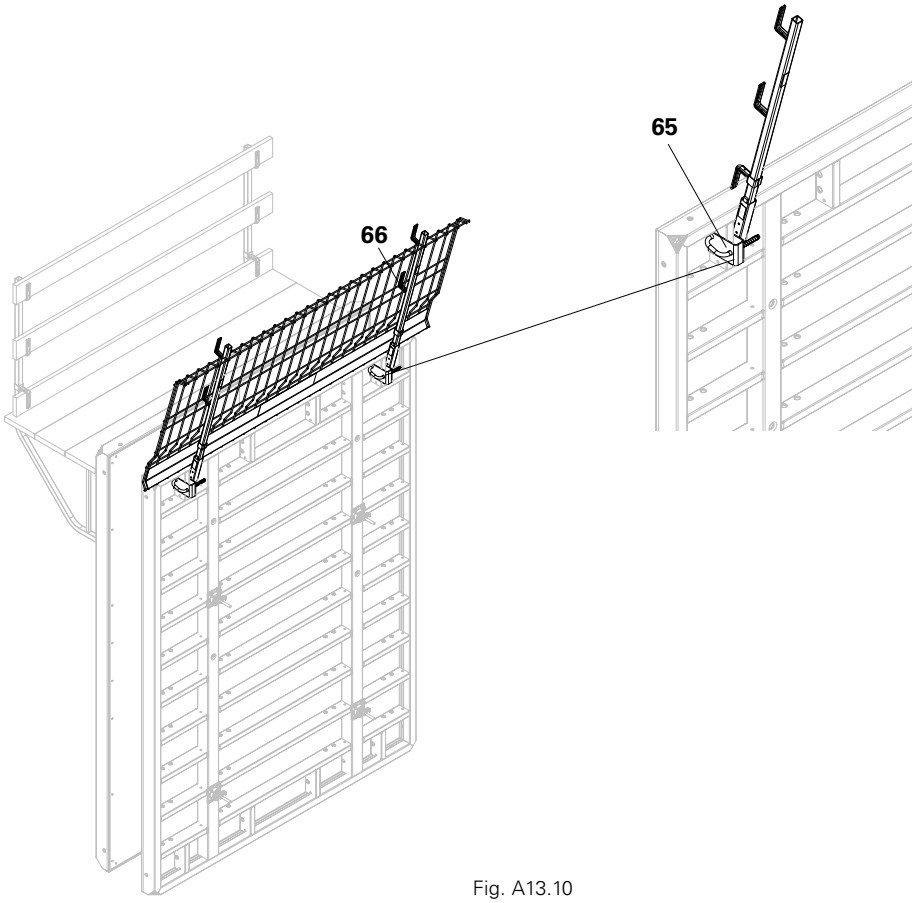

Fig. A13.10

Extensions up to h = 5.40 m

Permissible load-bearing capacity of the Lifting Hook TRIO 1.5 t:
With steel panels: 1.5 t
With aluminium panels: 750 kg
Follow Instructions for Use: Lifting Hook MAXIMO 1.5 t!

Panel Connections
With height extension units, the Alignment Coupler BFD (20) is used on the panel joints.
(Fig. A14.01a - d)

For extension possibilities, number and arrangement of Alignment Couplers BFD, Compensation Walers TAR 85 and formwork ties, see TRIO poster.
Pre-assemble extension units in a horizontal position, with the formlining facing downwards, on a flat assembly surface. Place timbers or similar underneath.

Erection by crane. (Fig. A14.02)

TR 30 / 60 / 72

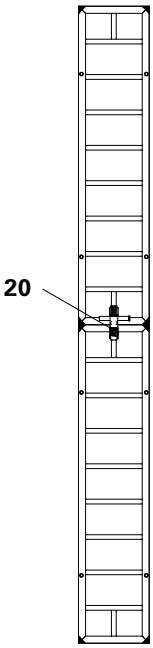

Fig. A14.01a

TR 90 / 120

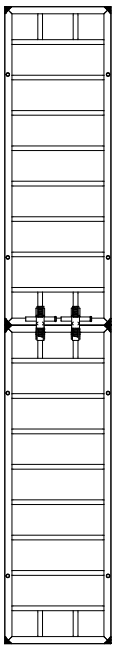

Fig. A14.01b

TR 270 x 240

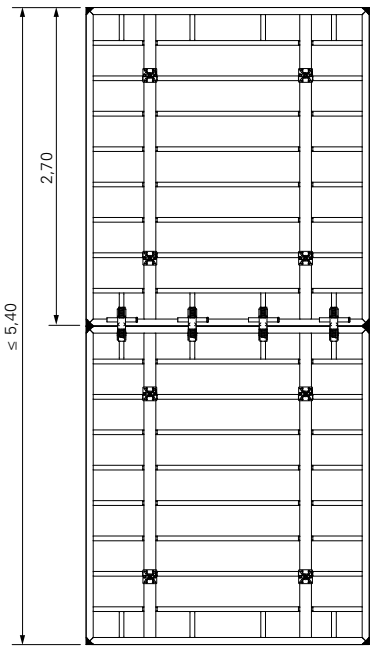

Fig. A14.01c

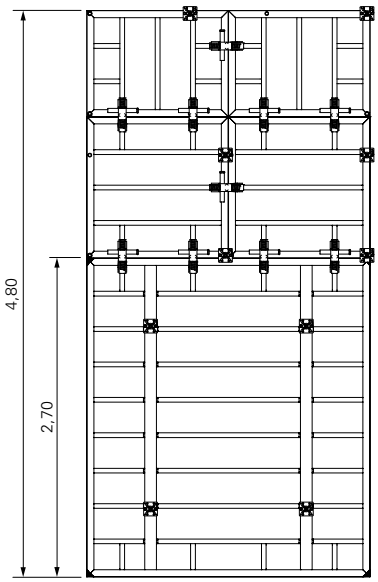

Fig. A14.01d

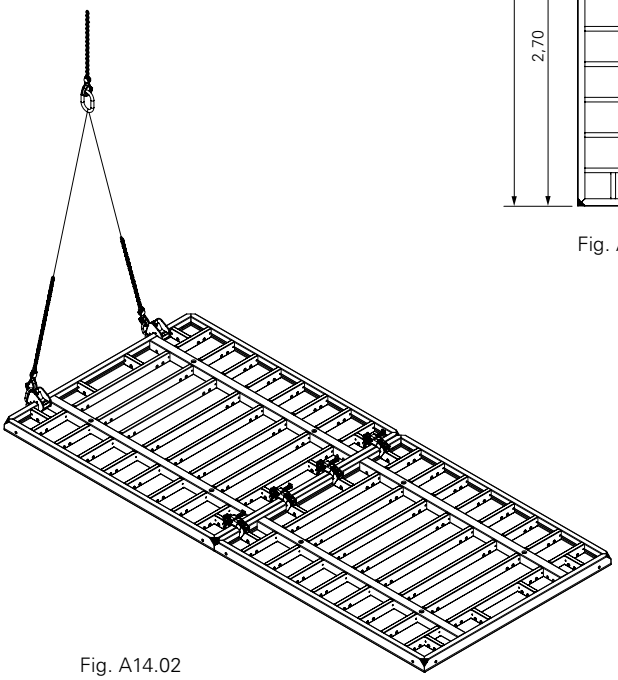

Fig. A14.02

Extensions up to h = 8.10 m

Permissible load-bearing capacity of the Lifting Hook TRIO 1.5 t:
With steel panels: 1.5 t
With aluminium panels: 750 kg
Follow Instructions for Use: Lifting Hook MAXIMO 1.5 t!

Panel Connections
With extension heights > 5.40 m, the Alignment Coupler BFD (20) and Compensation Waler TAR 85 (23) are used on the panel joints.
(Fig. A14.03a, A14.03b)

For extension possibilities, number and arrangement of Alignment Couplers BFD, Compensation Walers TAR 85 and formwork ties, see TRIO poster.
Pre-assemble extension units in a horizontal position, with the formlining facing downwards, on a flat assembly surface. Place timbers or similar underneath.
When using the Panel TR 30 as the topmost extension panel, the top tie point is left unused.

Erection by crane.
(Fig. A14.04)

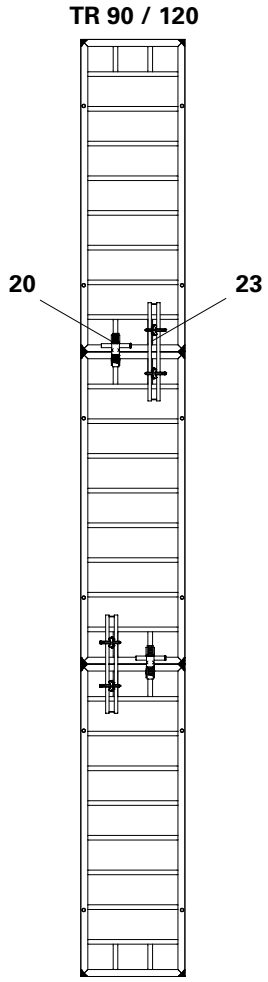

Fig. A14.03a

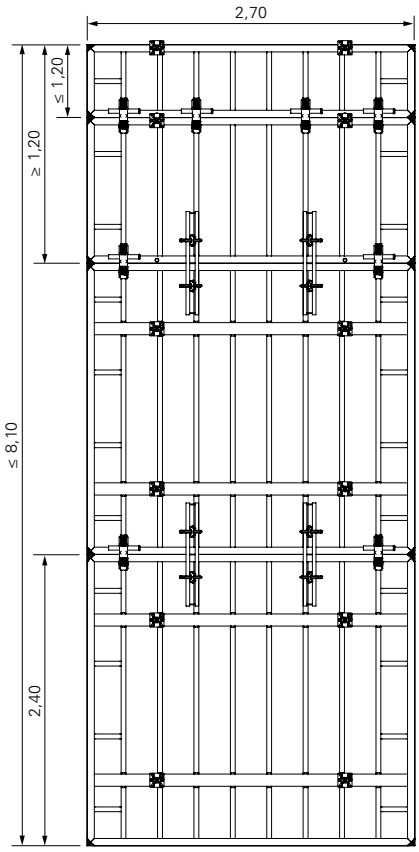

Fig. A14.03b

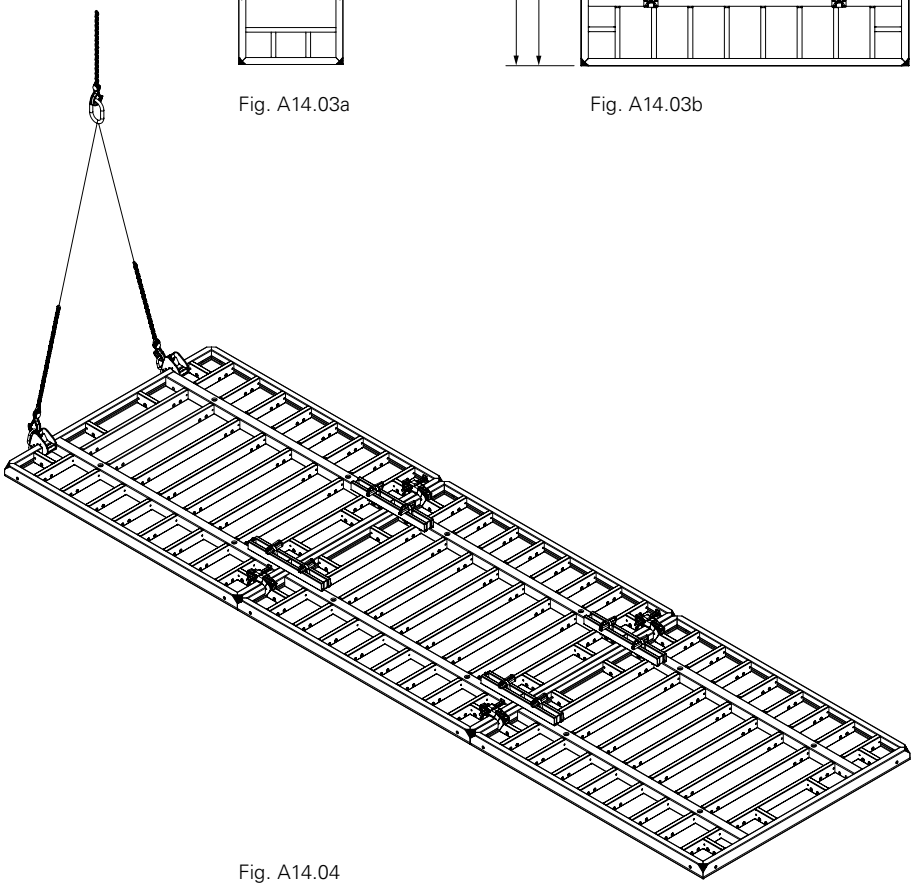

Fig. A14.04

Foundation Strap TRIO

The Foundation Strap TRIO (80) is used for forming individual foundations using the "windmill configuration".
(Fig. A15.01)

Assembly
1. Attach Foundation Strap to the panel.
2. Slide Foundation Strap as far as possible on the offset panel; upper web rests against the panel.
3. Fix locating board (81) with nails.

(Fig. A15.01 + A15.01a)

The Foundation Strap must rest against the panel.

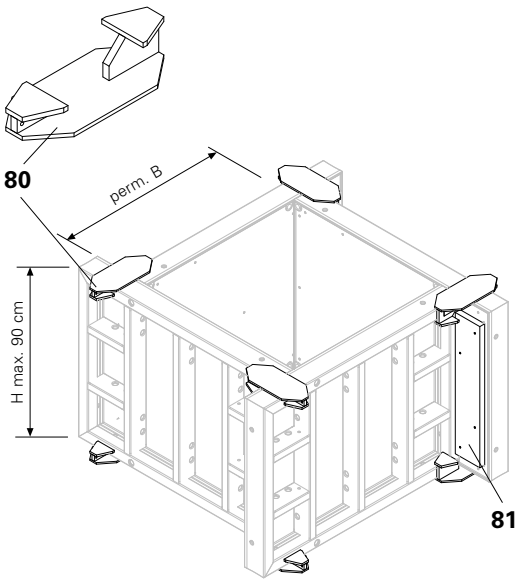

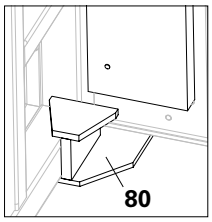

H [cm]	perm. B [cm]
60	255
90	200

Fig. A15.01

Foundation Tie Clamp TRIO TLS

If the bottom tie positions in the strip and individual foundations are missing, the Foundation Tie Clamp with perforated foundation tie are used.

Required length of the Perforated Foundation Tie:
Foundation width + 50 cm.

Assembly
1. Place TRIO panel on the Perforated Foundation Tie (86).
2. Attach Foundation Tie Clamp TRIO TLS (85) to the bottom connection hole by means of bolts (85.1).
3. Attach Perforated Foundation Tie to the tensioning lever (85.2).
4. Tension using ratchet, SW 14. Perm. Tension force: 12.9 kN.

(Fig. A15.02)

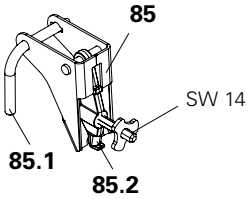

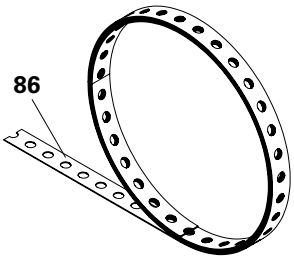

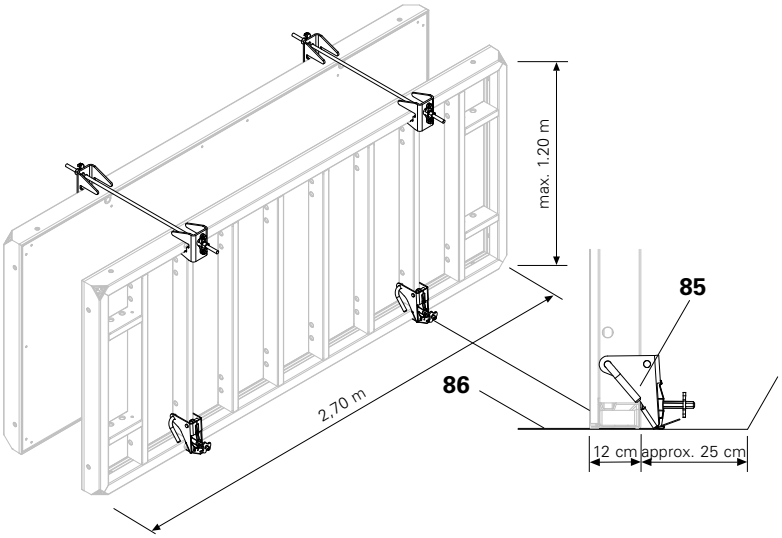

Fig. A15.02

Polygonally-formed TRIO panel

Circular structures can be formed with TRIO by using the corresponding panel widths and filler timber. See table below. Anchoring takes place by means of filler timber.

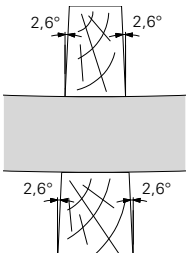

Fig. A16.01

- In order that the effectiveness of the Alignment Coupler BFD (20) is not affected, the panels may deviate from the centre by a maximum of 2.6°. (Fig. A16.01)
- Filler timber width of the inner compensation (50) = min. 4 cm.
- Filler timber width of the outer compensation (50) = min. 10 cm.
- (Fig. A16.02)
- Do not set the Alignment Coupler BFD (20) on the struts.
- (Fig. A16.03)

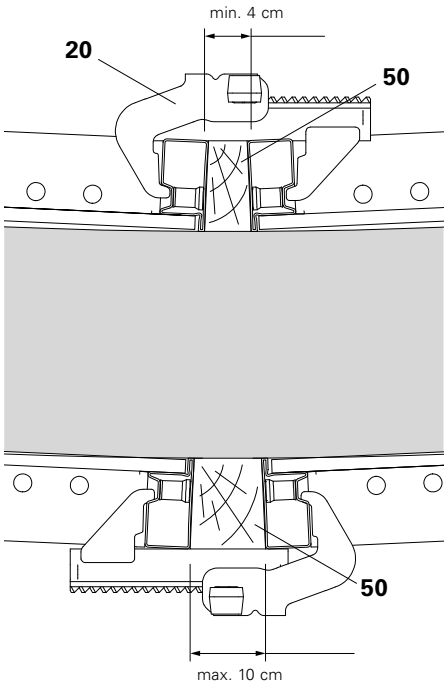

Fig. A16.02

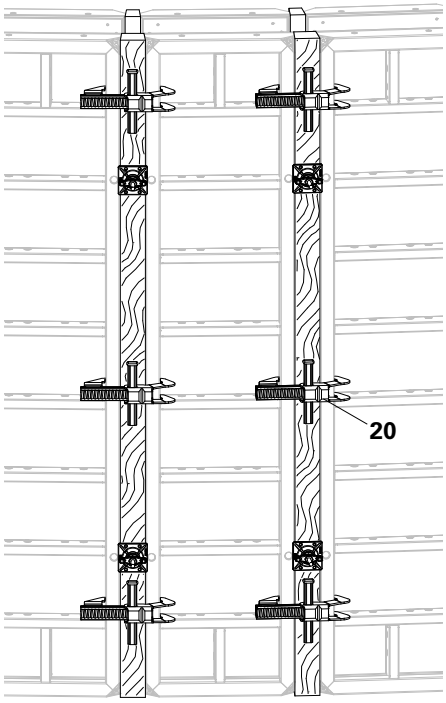

Fig. A16.03

Table
Min. radius R and deviation from curve S depending on panel width B.

B	R min [m]	S [mm]
TR 30	3,55	4
TR 60	6,90	7
TR 72	8,25	8
TR 90	10,25	11
TR 120	13,60	14
TR 240	26,95	28
TR 270	30,30	31

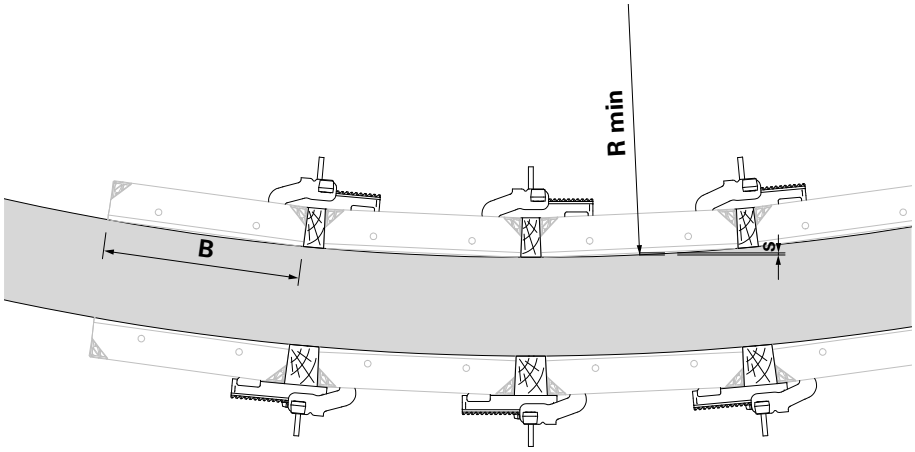

Shaft Element TSE

Load-bearing capacity 2.0 t!

For fast striking and moving of TRIO shaft formwork.

Assembly

1. Insert Shaft Element (90) between two TRIO panels. (Fig. A17.01)
2. Secure with bolts and cotter pins (90.1). (Fig. A17.02)
   – With TRIO Panel TR 30, secure using the inner holes.
   – With TRIO Panel TR 60, 72, 90 and 120, secure using the outer holes.
3. Transport panel unit to place of use and attach to the internal formwork with the BFD Alignment Couplers. (Fig. A17.03)
4. Bring shaft element into shuttering position by means of a crowbar. Press crowbar downwards. (Fig. A17.04a, A17.04b)
5. Anchor through the Shaft Element.

– Minimum internal shaft width 1.30 m.
– With TRIO Panel TR 30 upwards, there is the possibility of connecting TRIO panels with the Shaft Element TSE.
– Connecting the Panel TR 24 and TRIO Inside Corner TU is not possible.

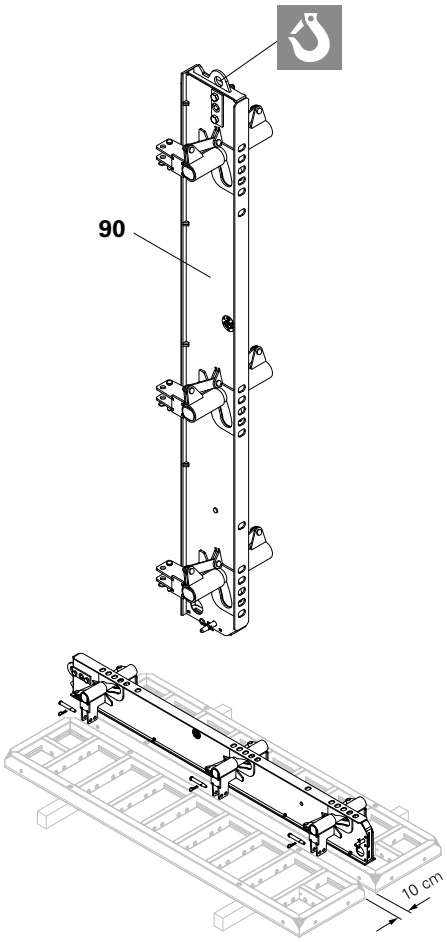

Fig. A17.01

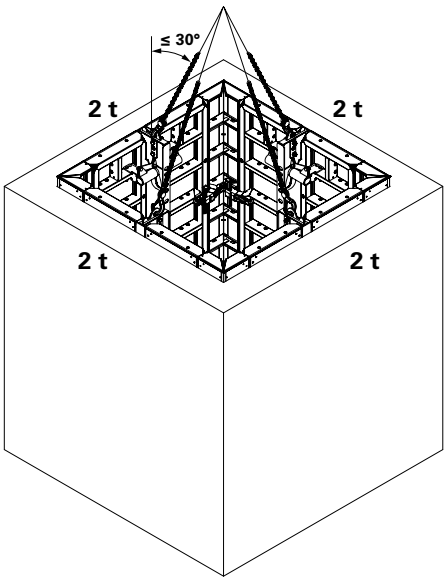

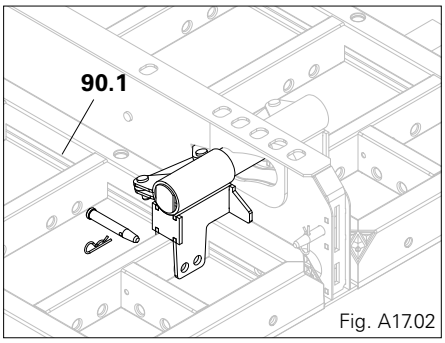

Fig. A17.02

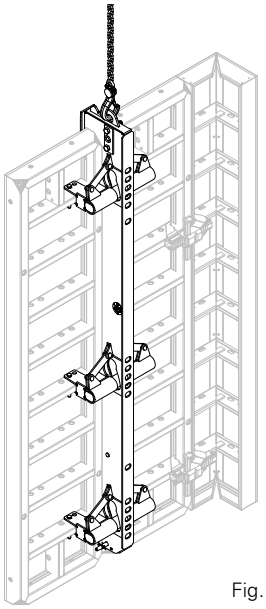

Fig. A17.03

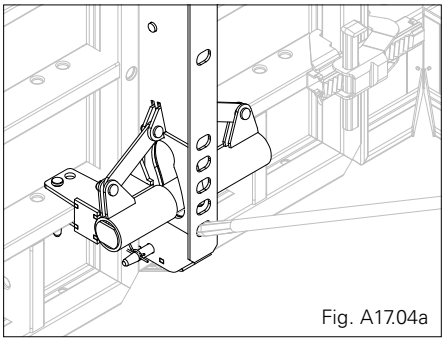

Fig. A17.04a

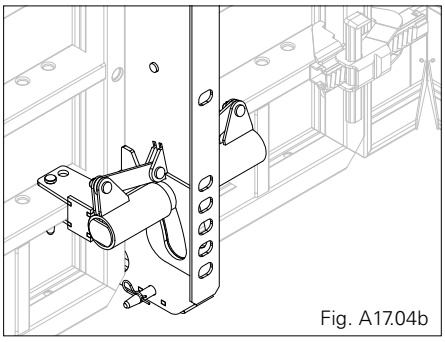

Fig. A17.04b

Shuttered
- The compensation in the external formwork opposite is 10 cm wide.
- Anchoring takes place through the Shaft Element.

(Fig. A17.05a)

Fig. A17.05a

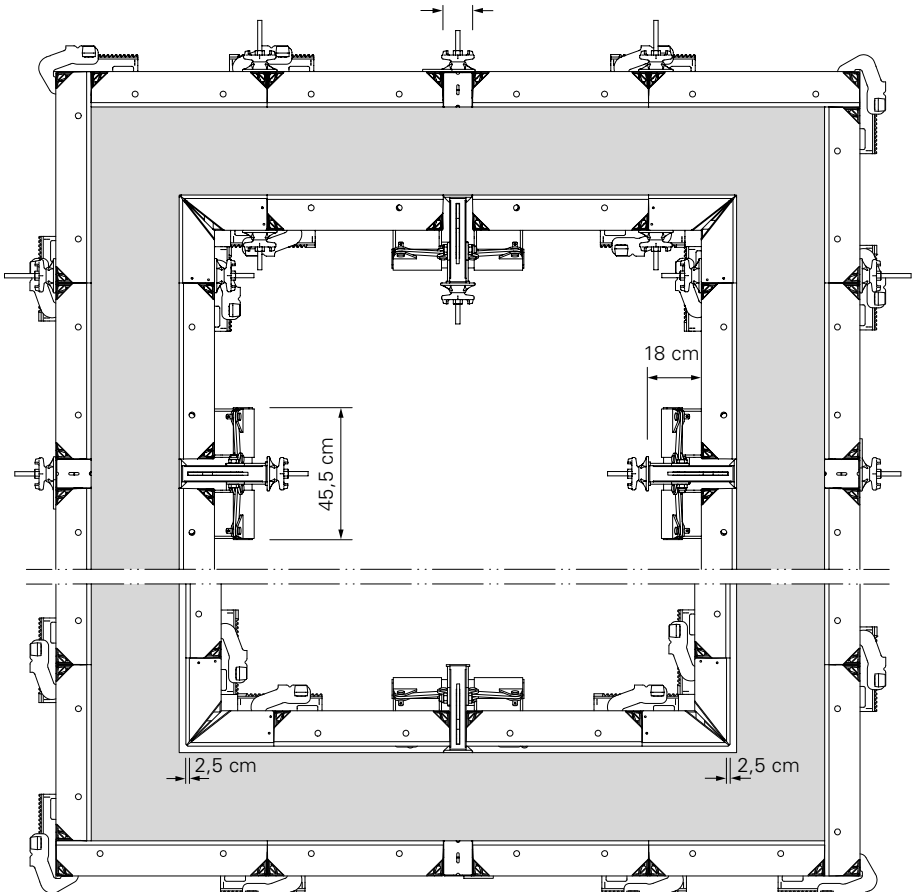

Fig. A17.05b

Struck

Striking
1. Remove anchoring components.
2. Attach crane lifting gear to all four shaft elements.
3. Tension slightly and bring the shaft element with crowbar into the striking position. Push crowbar upwards. (Fig. A17.06a, A17.06b) The striking dimensions are reduced by 2.5 cm on each side of the shaft. (Fig. A17.05b)
4. Lift the complete shaft internal formwork.

With rectangular shafts, adjustable lifting chains are required due to the different lengths of the attachment points in order to achieve virtually the same tension force on all four slings.

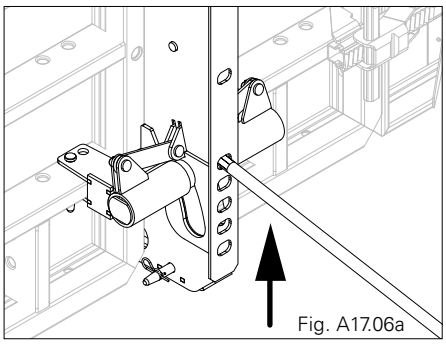

Fig. A17.06a

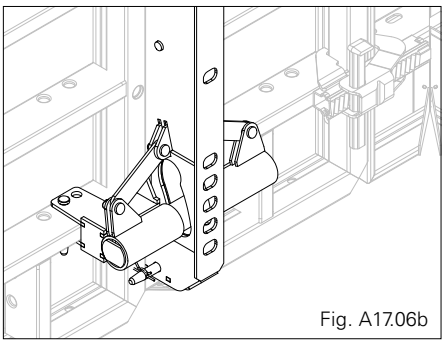

Fig. A17.06b

Extensions
Place shaft panels on top of each other and secure with bolts (90.2).
(Fig. A17.07)

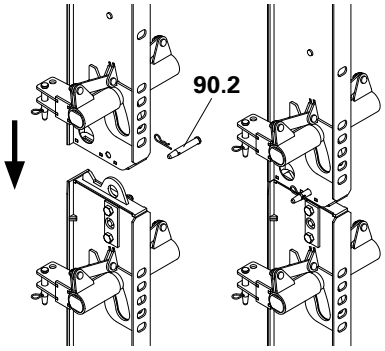

Abb. A17.07

Standard Panel Joint

Panel connection with 3 x Alignment Couplers BFD (20).
(Fig. B1.01)

For concreting heights up to 3.30 m, only anchor rows ① + ③ are to be used.

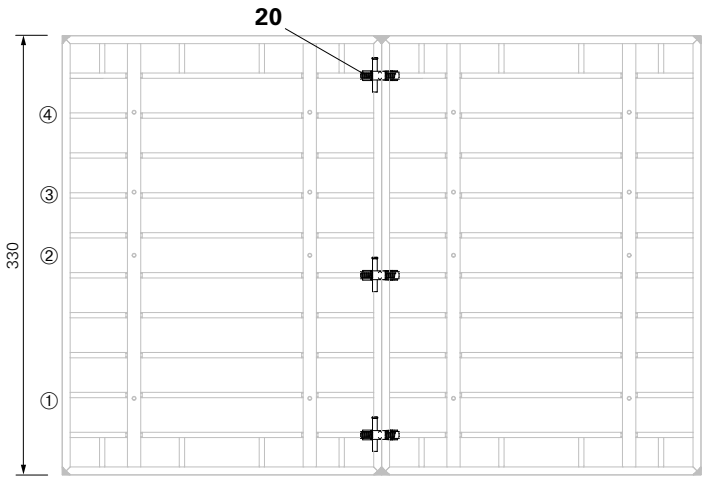

Fig. B1.01

Combination 330 + 270 h = 330 with h = 270

(Fig. B1.02)

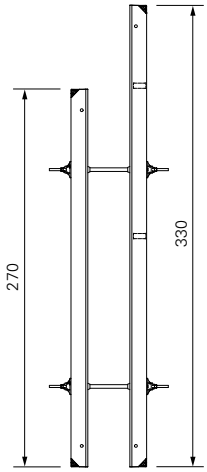

Fig. B1.02

External Corners

Panel connection with 7 x Alignment Couplers BFD (20).
(Fig. B1.03)

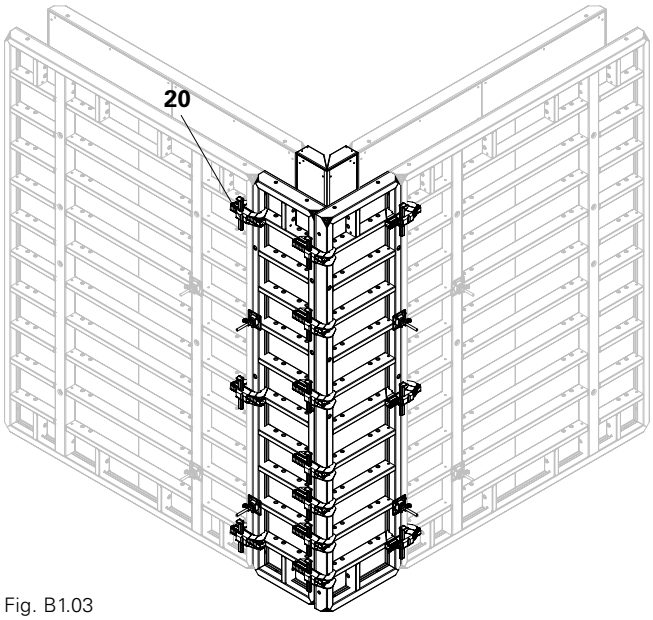

Fig. B1.03

Obtuse and Acute-Angled Corners

Outside
Panel connection per side with
8 x Alignment Couplers BFD (20) and
2 x Compensation Walers TAR 85 (23).
(Fig. B1.04)

Inside
Panel connection per side with
5 x Alignment Couplers BFD (20).
(Fig. B1.05)

Fig. B1.04

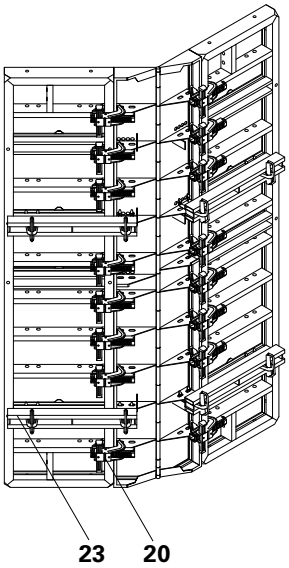

Fig. B1.05

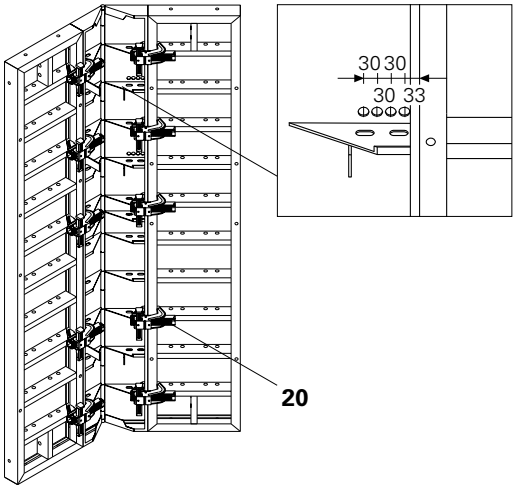

Extension h = 330 + 270

Height 330
Panel connection per side with
6 x Alignment Couplers BFD (20) and
3 x Compensation Walers TAR 85 (23).

Height 270
Panel connection per side with
6 x Alignment Couplers BFD (20) and
2 x Compensation Walers TAR 85 (23).
(Fig. B1.06)

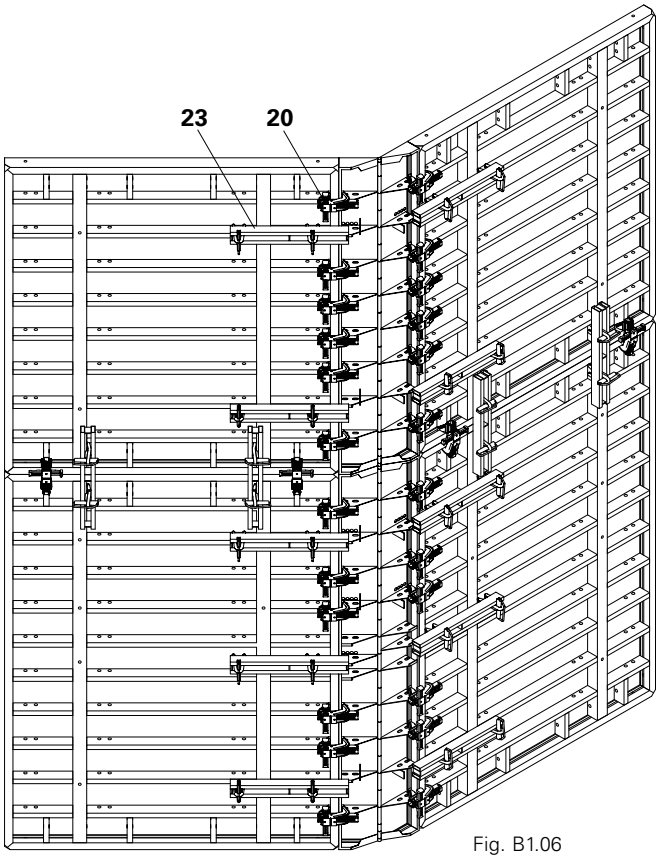

Fig. B1.06

Extensions up to h = 5.40 m

Permissible load-bearing capacity of the Lifting Hook TRIO 1.5 t:
With steel panels: 1.5 t
With aluminium panels: 750 kg
Follow Instructions for Use: Lifting Hook MAXIMO 1.5 t!

Panel connections
With height extension units, the Alignment Coupler BFD (20) is used on the panel joints.
(Fig. B1.07a + b)

For extension possibilities, number and arrangement of Alignment Couplers BFD, Compensation Walers TAR 85 and formwork ties, see TRIO poster, 330 section.
Pre-assemble extension units in a horizontal position, with the formlining facing downwards, on a flat assembly surface. Place timbers or similar underneath.

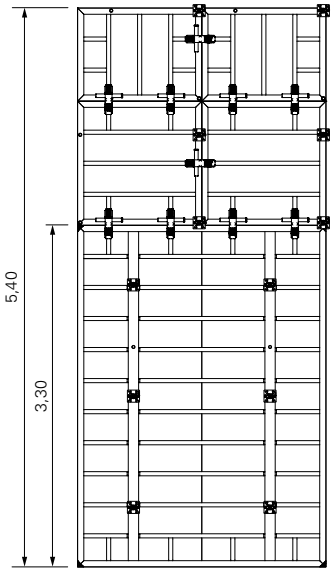

Fig. B1.07a

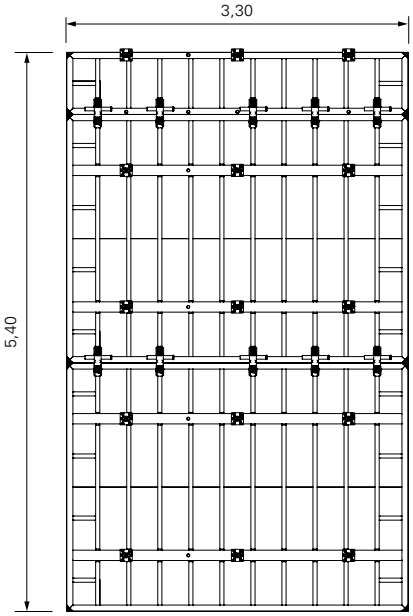

Fig. B1.07b

Extenions h = 6.00 m

With combination 330 below + 270 above: 5 anchors per height.
(Fig. B1.07c)

With the combination 270 below + 330 above: 4 anchors per height.
(Fig. B1.07d)

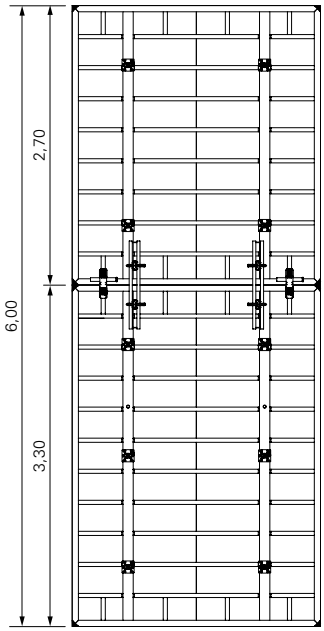

Fig. B1.07c

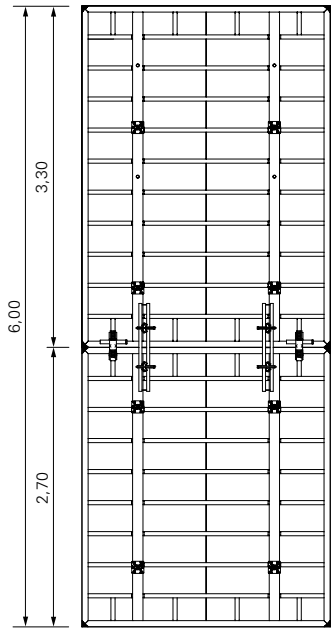

Fig. B1.07d

Extensions up to h = 8.10 m

Permissible load-bearing capacity of the Lifting Hook TRIO 1.5 t:
With steel panels: 1.5 t
With aluminium panels: 750 kg
Follow Instructions for Use: Lifting Hook MAXIMO 1.5 t!

Panel connections:
With extension heights > 5.40 m, the Alignment Coupler BFD (20) and Compensation Waler TAR 85 (23) are used on the panel joints.
(Fig. B1.08a - c)

For extension possibilities, number and arrangement of Alignment Couplers BFD, Compensation Walers TAR 85 and formwork ties, see TRIO poster, 330 section.
Pre-assemble extension units in a horizontal position, with the formlining facing downwards, on a flat assembly surface. Place timbers or similar underneath.
When using the Panel TR 30 as the topmost extension panel, the top tie point is left unused.

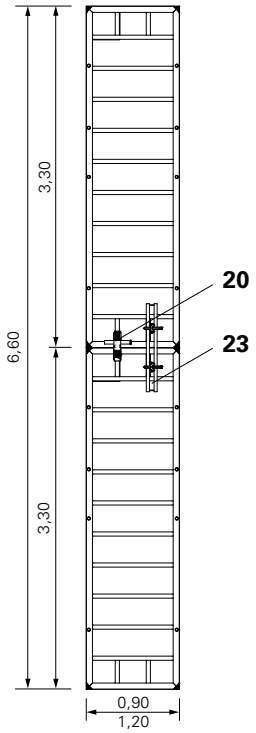

Fig. B1.08a

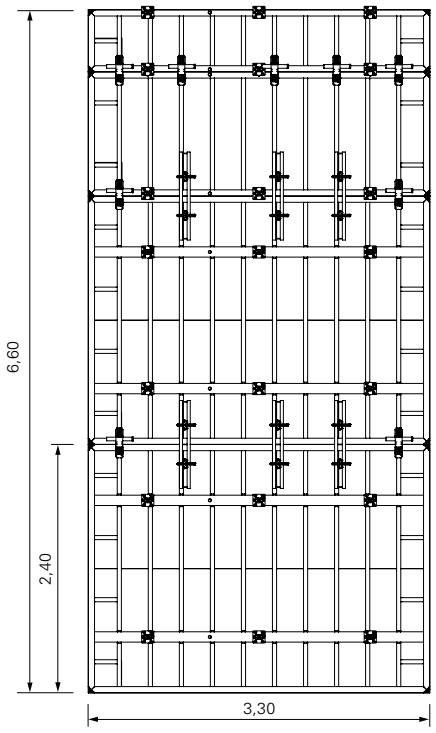

Fig. B1.08b

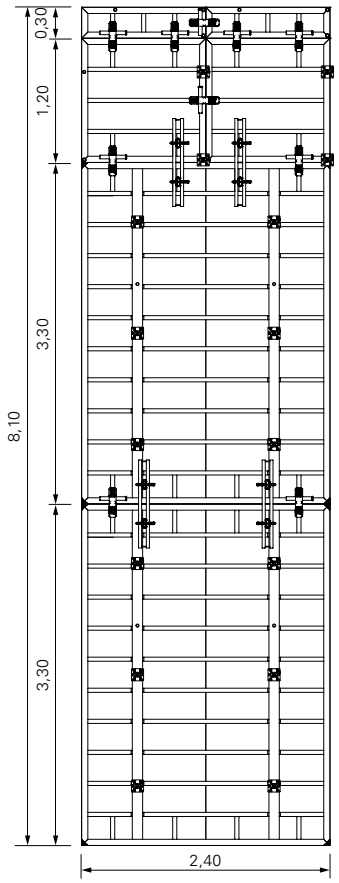

Fig. B1.08c

TRIO Aluminium Panels

Permissible load-bearing capacity of the Lifting Hook 1.5 t for aluminium panels is 750 kg!
Follow Instructions for Use: Lifting Hook MAXIMO 1.5 t!
For extensions in connection with steel panels, the aluminium panels must always be used on top!

- When using TRIO Alu panels, the same formwork guidelines apply as for the TRIO 270 Steel.
- TRIO Alu panels can be combined with steel panels.

Panel widths with h = 2.70 m:
90 / TAM 72 / 60 / 30 cm.
(Fig. B2.01)
Panel widths with H = 0.90 m:
120 / TAM 72 / 60 / 30 cm.

Technical Data
Hydrostatic pressure 67.5 kN/m², Line 7, DIN 18202.

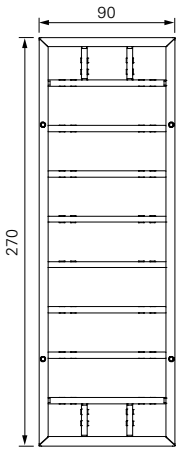

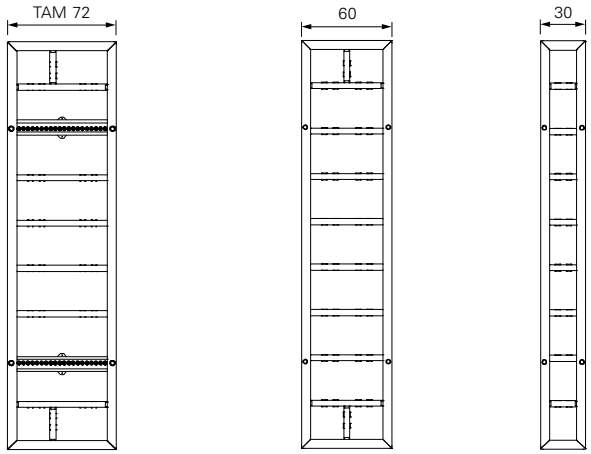

Fig. B2.01

TRIO Structure Panels

TRIO Structure has been developed for special concrete surfaces, see also TRIO Structure brochure.

The TRIO panel is delivered complete with a fixing board (10.9). It can be covered with profiled boards (10.8) (board structure).
(Fig. B3.01)

When using TRIO Struture panels, the same formwork guidelines apply as for the TRIO 270 Steel.

It can be fully combined with TRIO 270 and TRIO 330 Steel.

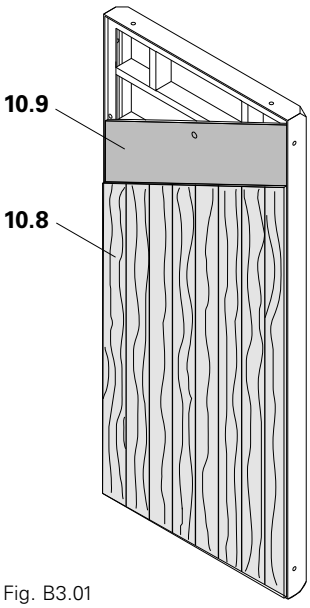

Fig. B3.01

Assembly of profiled boards
Fixing can be done from either at the front or rear.

Corner 90° consisting of:
- Panel TSM 72 (12)
- Panel TS 60 (11)
- Corner TSE (13)

(Fig. B3.02)

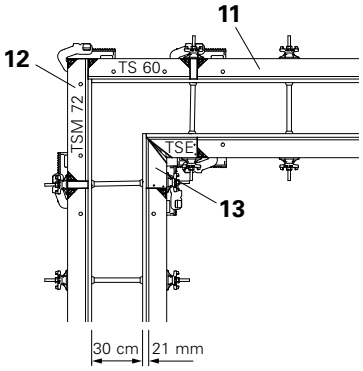

Fig. B3.02

Corner 135° consisting of
- Articulated Corner TSGE (14)
- Panel TSM 72 (12)
- Panel TS 60 (11)
- Compensation Waler TAR 85 (23)

(Fig. B3.03)

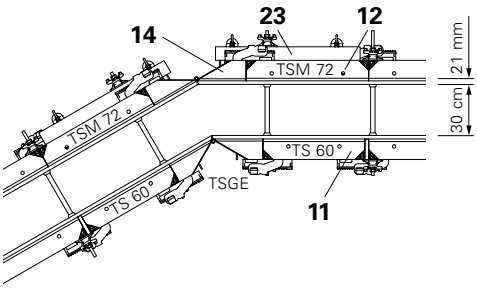

Fig. B3.03

Item no.	Weight kg	
054304	398.000	**Panel TR/4 330 x 240** Steel panel with 18 mm plywood.

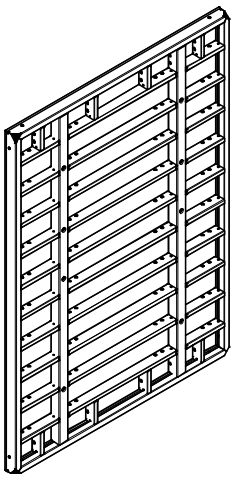

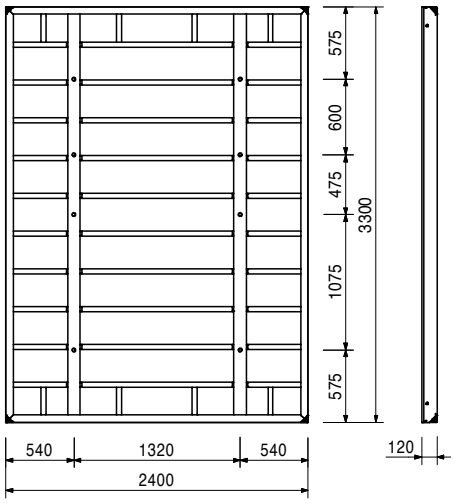

054314	195.000	**Panel TR/4 330 x 120** Steel panel with 18 mm plywood.

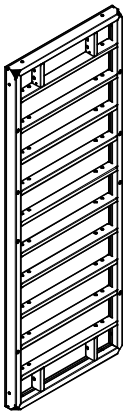

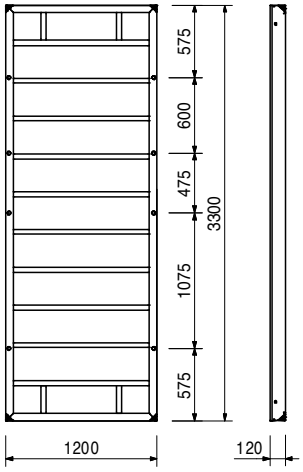

054324	140.000	**Panel TR/4 330 x 90** Steel panel with 18 mm plywood.

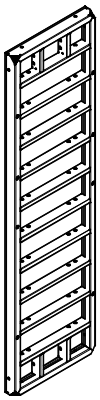

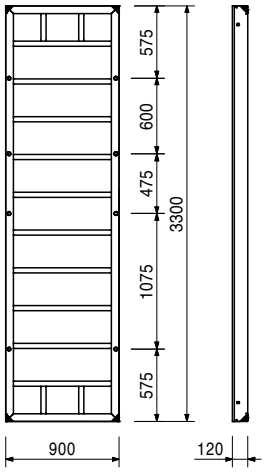

Item no.	Weight kg	
054334	119.000	**Panel TR/4 330 x 72** Steel panel with 18 mm plywood.

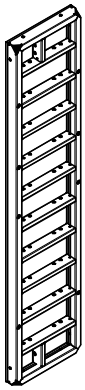

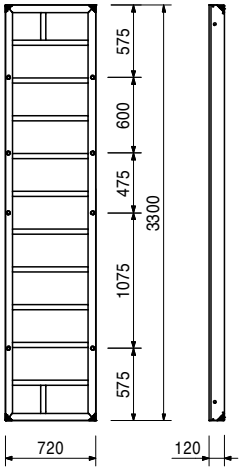

054354	107.000	**Panel TR/4 330 x 60** Steel panel with 18 mm plywood.

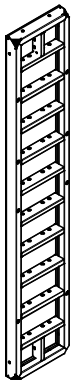

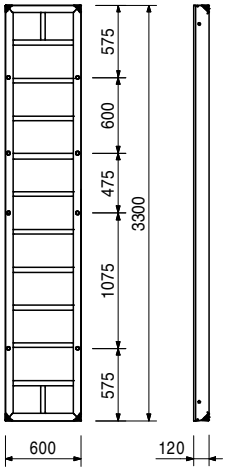

054364	74.200	**Panel TR/4 330 x 30** Steel panel with 18 mm plywood.

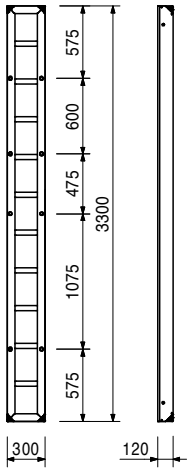

Item no.	Weight kg	
054344	133.000	**Multi Panel TRM/4 330 x 72** Steel panel with 18 mm plywood. For oblique angles, wall connections etc. **Complete with** 88 pc. 030300 Plug Ø 20/24 mm

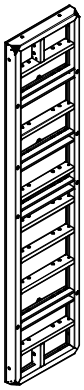

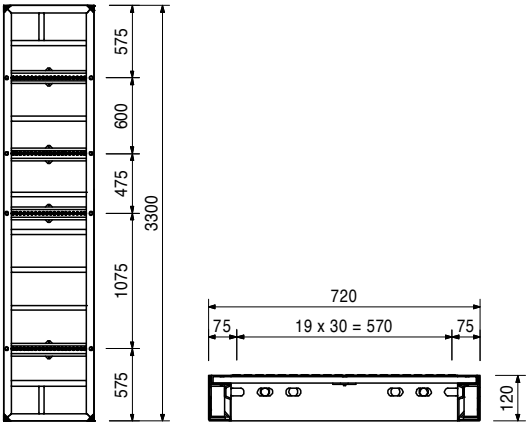

054374	85.800	**Inside Corner TE/4 330** Steel panel with 18 mm plywood. For 90° internal corners.

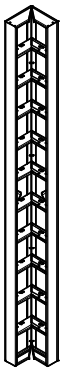

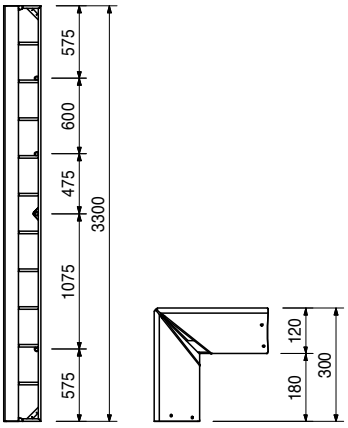

054414	119.000	**Articulated Corner TGE/4 330** Steel panel with steel formlining. For oblique angles from 75° upwards, used externally and internally.

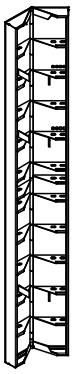

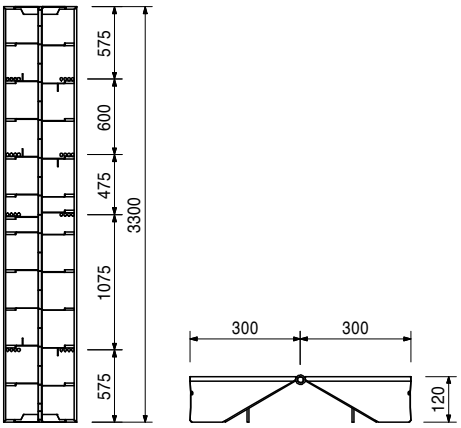

Item no.	Weight kg		B
		Wall Thickness Comp. WDA/4 330	
054391	20.100	**Wall Thickness Comp. WDA/4 330 x 5**	50
054401	21.400	**Wall Thickness Comp. WDA/4 330 x 6**	60
054435	12.400	**Wall Thickness Comp. WDA/4 330 x 10, Alu**	100

For adjusting to wall thicknesses.

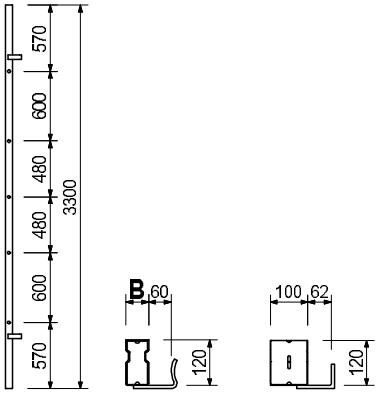

105525	142.000	**Shaft Element TSE 330** Panel for moving complete shaft internal formwork.

Complete with
7 pc. 105400 Pin Ø 20 x 140, galv.
7 pc. 018060 Cotter Pin 4/1, galv.
Technical Data
Permissible load-bearing point capacity 2.0 t.

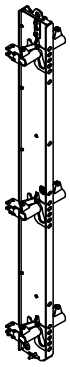

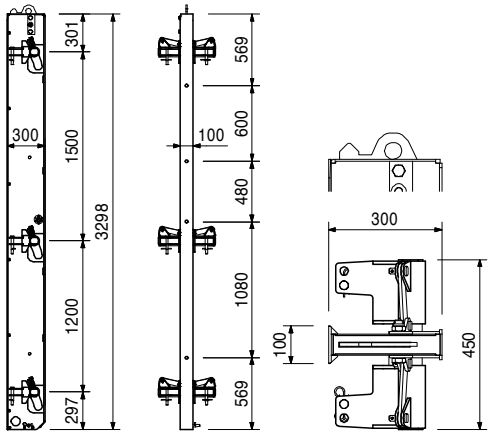

Item no.	Weight kg	
023050	62.300	**Stopend Panel TR/4 330 x 24** Steel panel with 18 mm plywood.

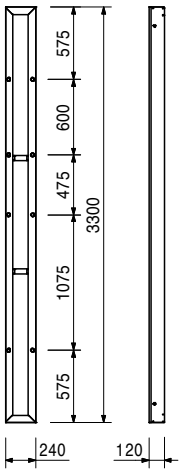

054384	62.200	**Filler Plate LA/4 330 x 36** For continuous compensations from 6 to 36 cm.

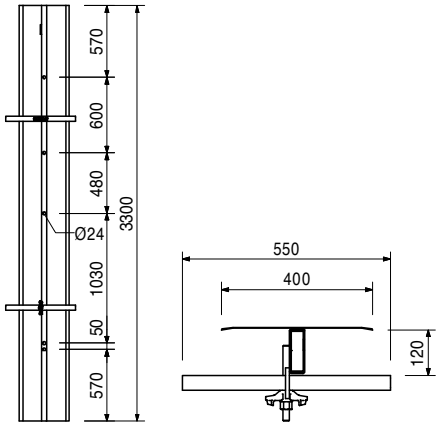

054430	6.400	**Filler Support TPA 330** For compensations with 21 mm filler plates.

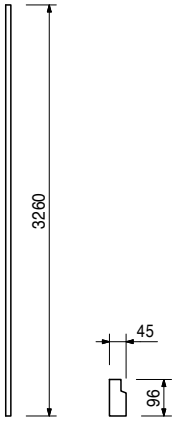

Item no.	Weight kg	
101829	9.820	**Filler Profile TPP 330, Alu** For compensation with 21 mm filler plates.

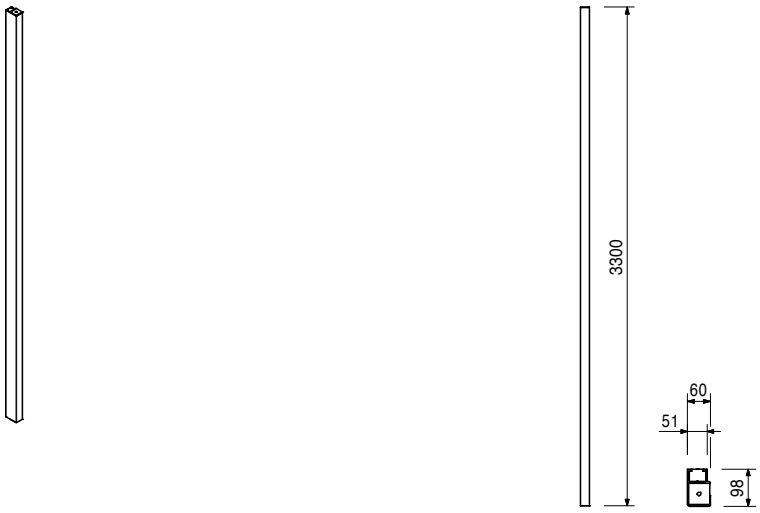

022570	329.000	**Panel TR 270 x 240** Steel panel with 18 mm plywood.

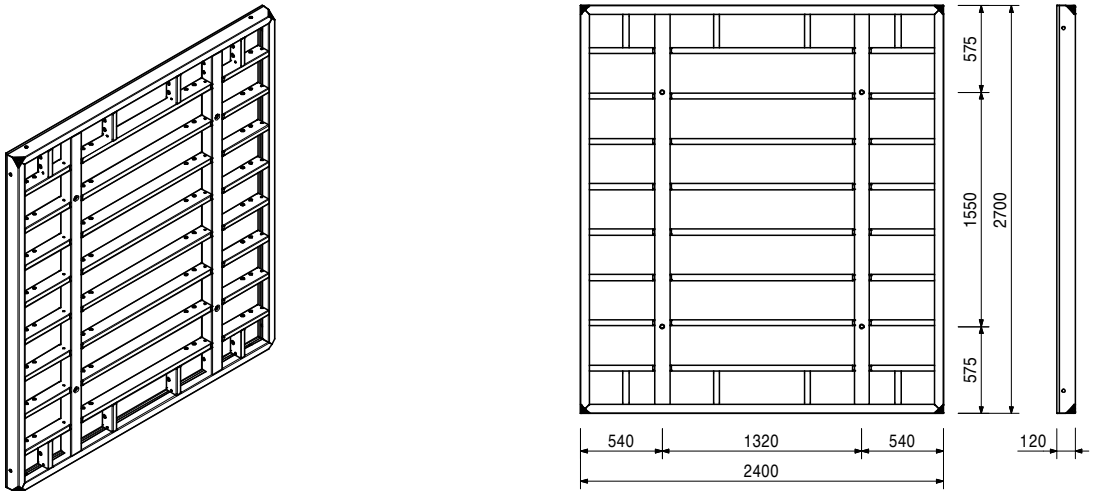

022510	162.000	**Panel TR 270 x 120** Steel panel with 18 mm plywood.

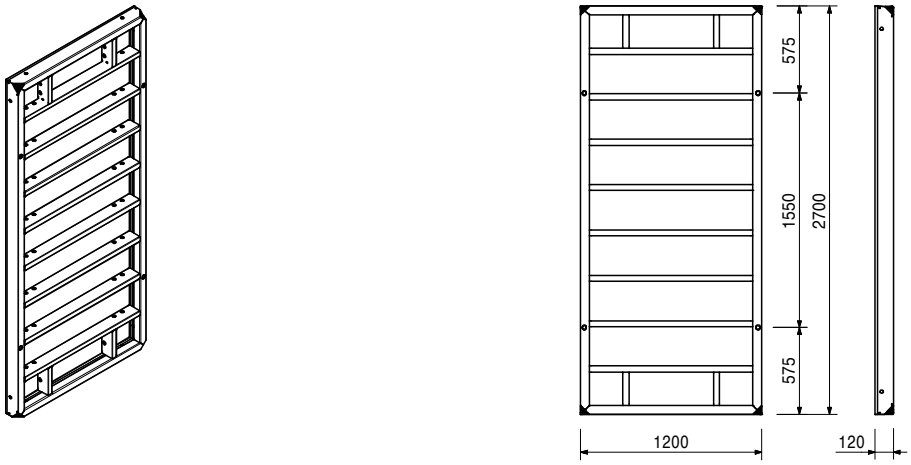

Item no.	Weight kg	
022520	115.000	**Panel TR 270 x 90** Steel panel with 18 mm plywood.

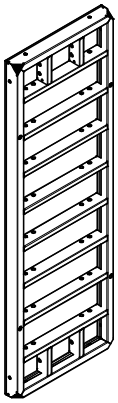

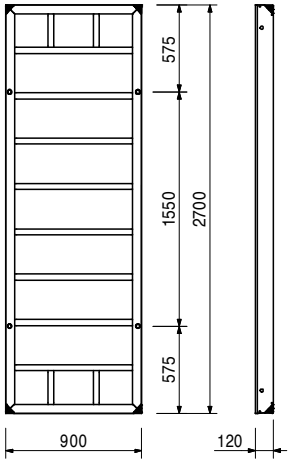

022530	97.200	**Panel TR 270 x 72** Steel panel with 18 mm plywood.

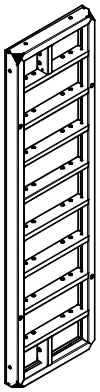

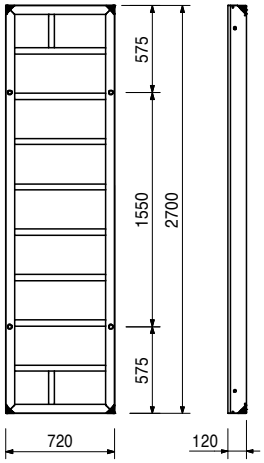

022550	87.400	**Panel TR 270 x 60** Steel panel with 18 mm plywood.

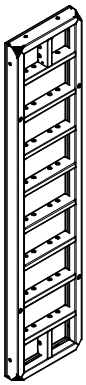

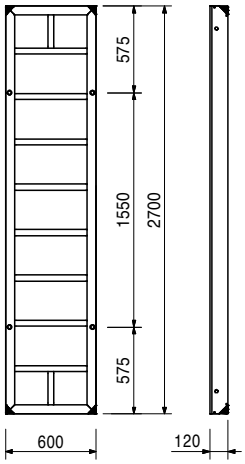

Item no.	Weight kg	
022560	60.300	**Panel TR 270 x 30** Steel panel with 18 mm plywood.

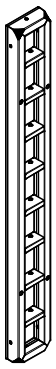

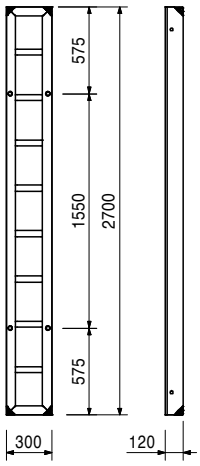

022540	103.000	**Multi Panel TRM 270 x 72** Steel panel with 18 mm plywood. For oblique angles, wall connections etc. **Complete with** 44 pc. 030300 Plug Ø 20/24 mm

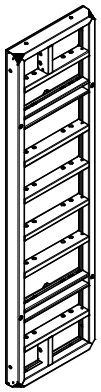

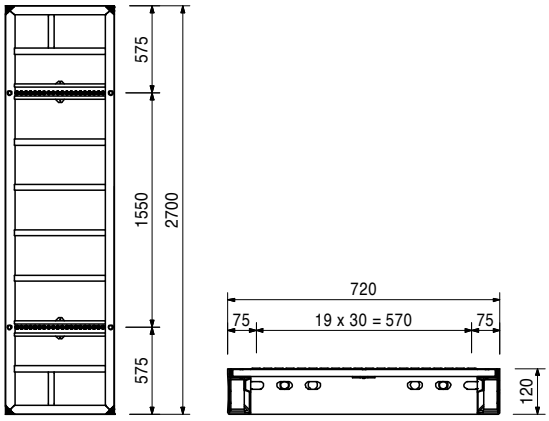

022580	69.800	**Inside Corner TE 270-2** Steel panel with 18 mm plywood. For 90° internal corners.

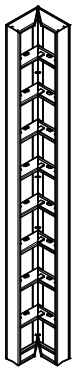

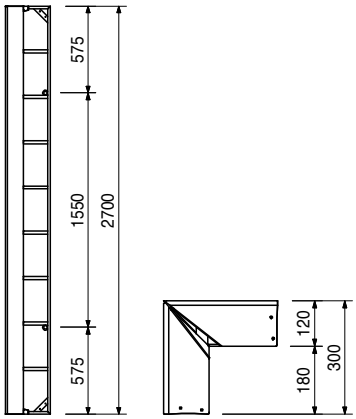

Item no.	Weight kg	
103317	56.900	**Internal Corner TEI 270/135°** Steel panel with 18 mm plywood. For 135° internal corners.

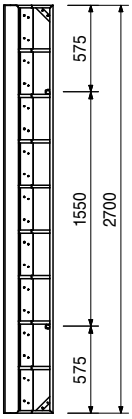

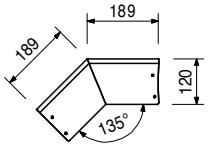

103337	76.500	**Outside Corner TEA 270/135°** Steel panel with 18 mm plywood. For 135° external corners.

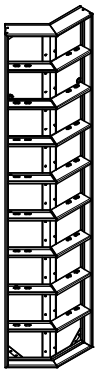

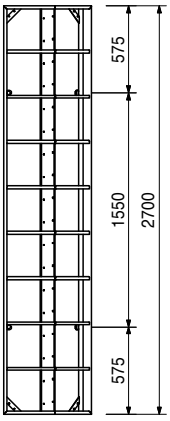

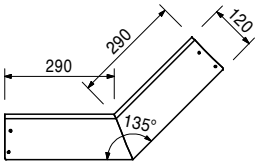

023200	94.900	**Articulated Corner TGE 270** Steel panel with steel formlining. For oblique angles from 75° upwards, used externally and internally.

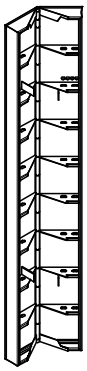

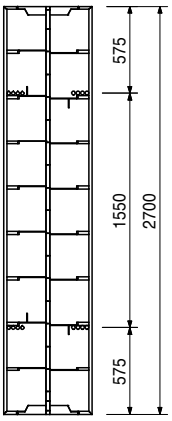

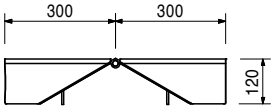

Item no.	Weight kg	
023040	50.500	**Stopend Panel TR 270 x 24** Steel panel with 18 mm plywood.

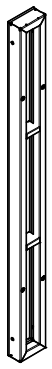

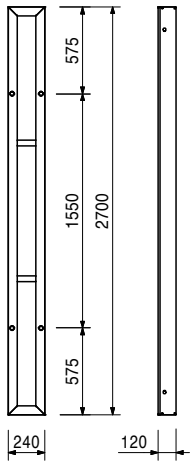

105523	127.000	**Shaft Element TSE 270** Panel for moving complete shaft internal formwork. **Complete with** 7 pc. 105400 Pin Ø 20 x 140, galv. 7 pc. 018060 Cotter Pin 4/1, galv. **Technical Data** Permissible load-bearing point capacity 2.0 t.

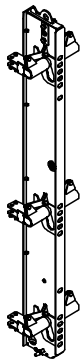

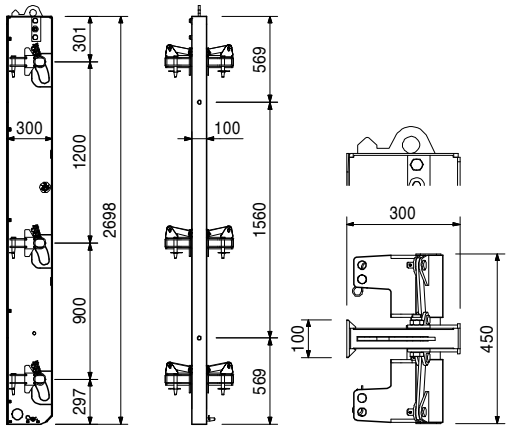

Item no.	Weight kg		B
		Wall Thickness Comp. WDA 270	
023182	16.200	**Wall Thickness Comp. WDA-2 270 x 5**	50
023192	17.200	**Wall Thickness Comp. WDA-2 270 x 6**	60
023995	10.100	**Wall Thickness Comp. WDA 270 x 10, Alu**	100

For adjusting to wall thicknesses.

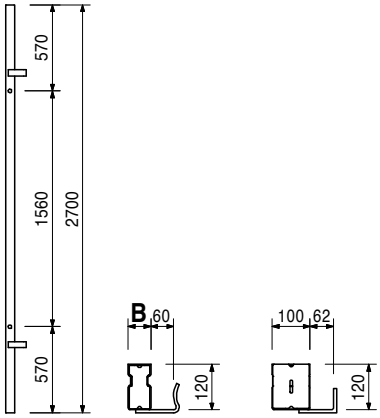

023170	48.900	**Filler Plate LA 270 x 36**

For continuous compensations from 6 to 36 cm.

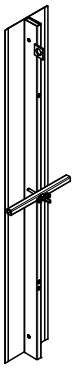

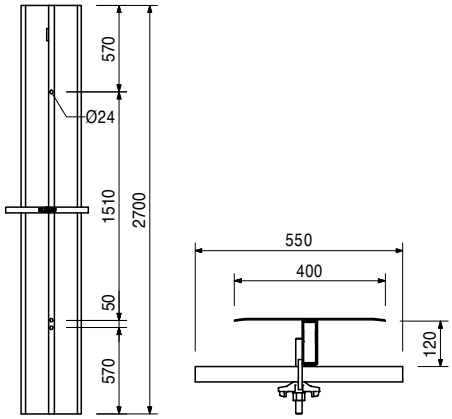

023460	4.710	**Filler Support TPA 270**

For compensations with 21 mm filler plates.

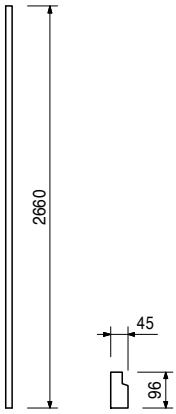

Item no.	Weight kg	
101813	8.040	**Filler Profile TPP 270, Alu** For compensation with 21 mm filler plates.

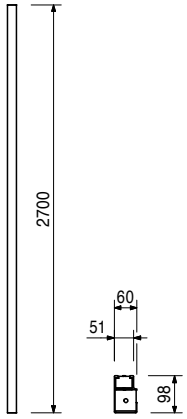

		Stopend Panels TRIO MT w/o waterstop bar	**B**
023061	27.500	**Stopend Panel TRIO MT 270 x 20**	118
023062	30.400	**Stopend Panel TRIO MT 270 x 24/25**	158
023064	37.300	**Stopend Panel TRIO MT 270 x 30**	218
023065	41.300	**Stopend Panel TRIO MT 270 x 35/36**	268

Centre piece without waterstop bar installation for stopend formwork.

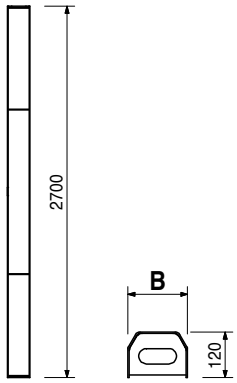

		Stopend Panels TRIO MTF w. waterstop bar	**B**
023074	29.200	**Stopend Panel TRIO MTF 270 x 20**	118
023075	33.400	**Stopend Panel TRIO MTF 270 x 24/25**	158
023077	38.600	**Stopend Panel TRIO MTF 270 x 30**	218
023076	42.500	**Stopend Panel TRIO MTF 270 x 35/36**	268

Centre piece with waterstop bar installation for stopend formwork.

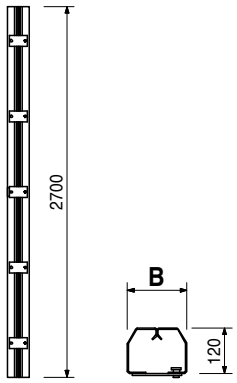

Item no.	Weight kg	
		Stopend Panels TRIO AT
023060	17.200	**Stopend Panel TRIO AT 270 x 3**
105953	19.000	**Stopend Panel TRIO AT 270 x 5**

External piece for stopend formwork.

Note
Concrete cover approx. 30 or 50 mm.

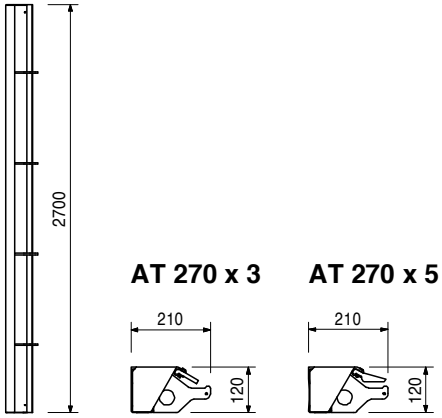

022514	163.000	**Panel TR 120 x 240**

Steel panel with 18 mm plywood.

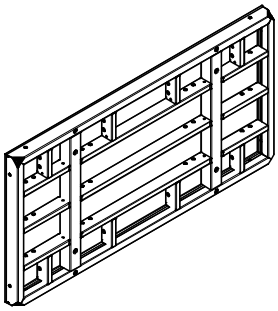

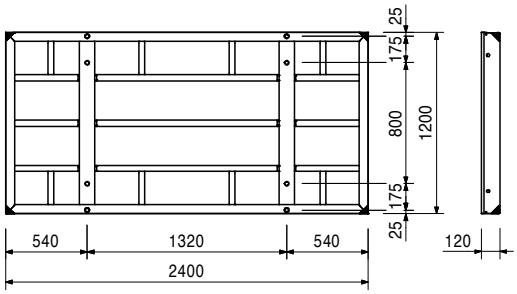

022600	76.100	**Panel TR 120 x 120**

Steel panel with 18 mm plywood.

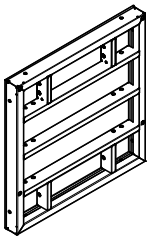

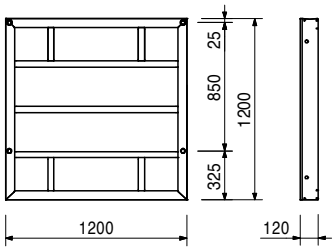

Item no.	Weight kg	
022610	58.200	**Panel TR 120 x 90** Steel panel with 18 mm plywood.

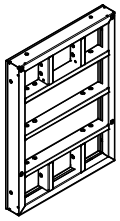

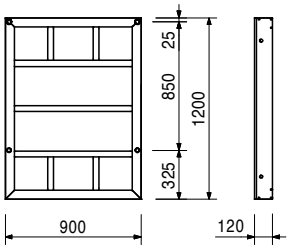

022620	48.600	**Panel TR 120 x 72** Steel panel with 18 mm plywood.

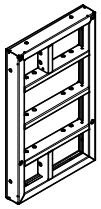

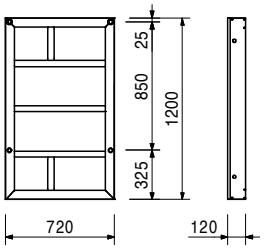

022640	43.400	**Panel TR 120 x 60** Steel panel with 18 mm plywood.

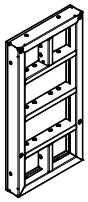

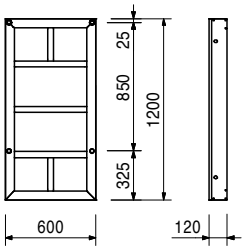

022650	28.400	**Panel TR 120 x 30** Steel panel with 18 mm plywood.

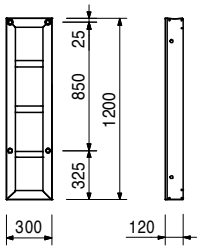

Item no.	Weight kg	
022630	56.300	**Multi Panel TRM 120 x 72** Steel panel with 18 mm plywood. For oblique angles, wall connections etc. **Complete with** 44 pc. 030300 Plug Ø 20/24 mm

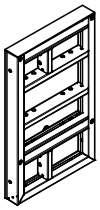

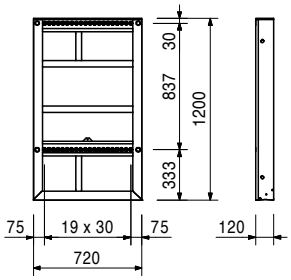

022660	33.100	**Inside Corner TE 120-2** Steel panel with 18 mm plywood. For 90° internal corners.

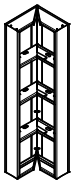

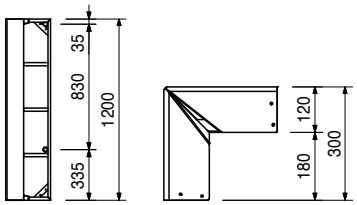

023300	43.600	**Articulated Corner TGE 120** Steel panel with steel formlining. For oblique angles from 75° upwards, used externally and internally.

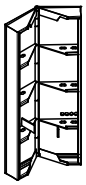

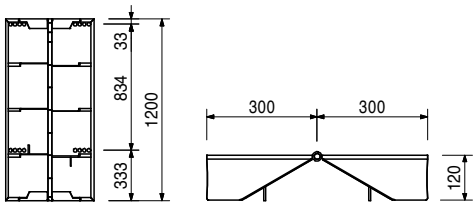

103284	26.400	**Internal Corner TEI 120/135°** Steel panel with 18 mm plywood. For 135° internal corners.

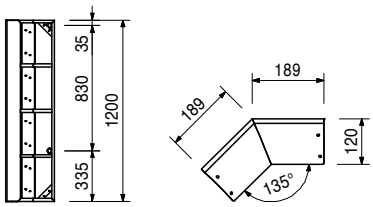

Item no.	Weight kg	
103330	35.900	**Outside Corner TEA 120/135°** Steel panel with 18 mm plywood. For 135° external corners.

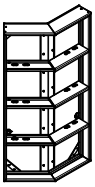

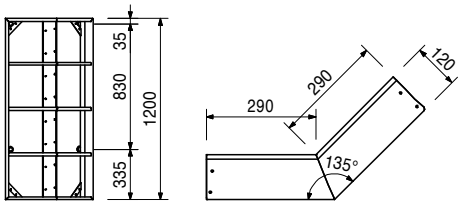

			B
		Wall Thickness Comp. WDA 120	
023282	7.610	**Wall Thickness Comp. WDA-2 120 x 5**	50
023292	8.090	**Wall Thickness Comp. WDA-2 120 x 6**	60
023990	4.680	**Wall Thickness Comp. WDA 120 x 10, Alu**	100

For adjusting to wall thicknesses.

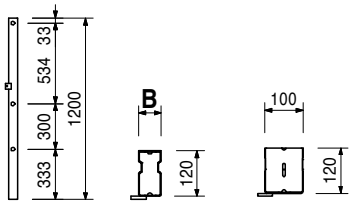

023270	24.500	**Filler Plate LA 120 x 36** For continuous compensations from 6 to 36 cm.

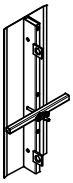

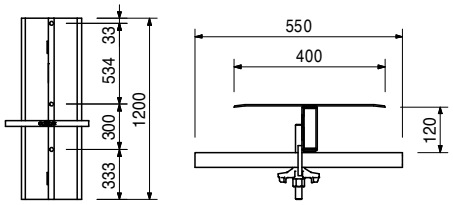

105524	72.600	**Shaft Element TSE 120** Panel for moving complete shaft internal formwork.

Complete with
5 pc. 105400 Pin Ø 20 x 140, galv.
5 pc. 018060 Cotter Pin 4/1, galv.
Technical Data
Permissible load-bearing point capacity 2.0 t.

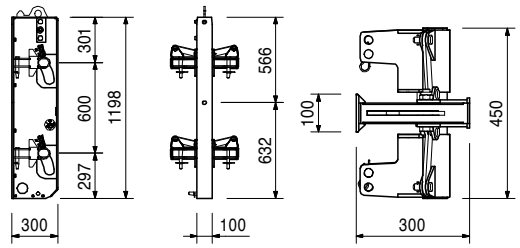

Item no.	Weight kg	
023030	23.100	**Stopend Panel TR 120 x 24** Steel panel with 18 mm plywood.

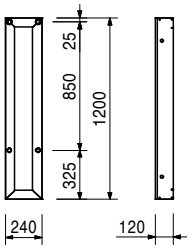

023450	2.060	**Filler Support TPA 120** For compensations with 21 mm filler plates.

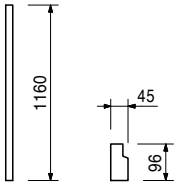

101823	3.590	**Filler Profile TPP 120, Alu** For compensation with 21 mm filler plates.

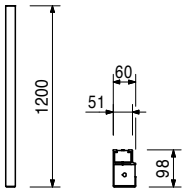

		Stopend Panels TRIO AT
023067	7.780	**Stopend Panel TRIO AT 120 x 3**
105978	8.580	**Stopend Panel TRIO AT 120 x 5**

External piece for stopend formwork.

Note
Concrete cover approx. 30 mm.

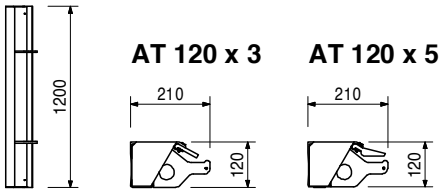

Item no.	Weight kg		
		Stopend Panels TRIO MT w/o waterstop bar	**B**
023068	11.800	**Stopend Panel TRIO MT 120 x 20**	118
023069	13.500	**Stopend Panel TRIO MT 120 x 24/25**	158
023071	16.300	**Stopend Panel TRIO MT 120 x 30**	218
023072	18.500	**Stopend Panel TRIO MT 120 x 35/36**	268

Centre piece without waterstop bar installation for stopend formwork.

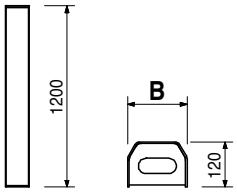

		Stopend Panels TRIO MTF w. waterstop bar	**B**
023081	12.800	**Stopend Panel TRIO MTF 120 x 20**	118
023080	14.700	**Stopend Panel TRIO MTF 120 x 24/25**	158
023078	16.800	**Stopend Panel TRIO MTF 120 x 30**	218
023079	18.600	**Stopend Panel TRIO MTF 120 x 35/36**	268

Centre piece with waterstop bar installation for stopend formwork.

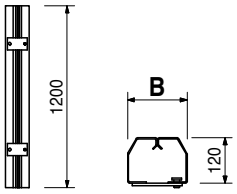

022790 34.500 **Panel TR 60 x 90**

Steel panel with 18 mm plywood.

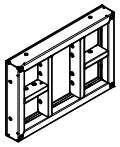

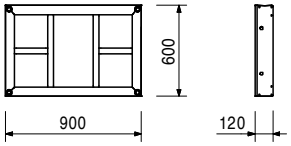

022800 28.900 **Panel TR 60 x 72**

Steel panel with 18 mm plywood.

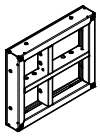

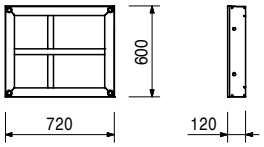

022810 25.700 **Panel TR 60 x 60**

Steel panel with 18 mm plywood.

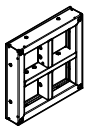

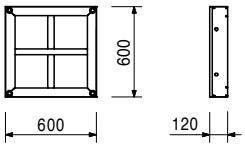

Item no.	Weight kg	
022820	15.600	**Panel TR 60 x 30** Steel panel with 18 mm plywood.

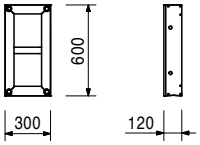

022840	18.000	**Inside Corner TE 60-2** Steel panel with 18 mm plywood. For 90° internal corners.

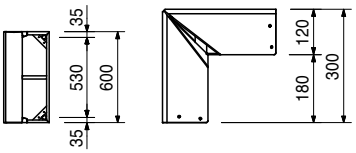

023850	70.200	**Panel Alu TRA 270 x 90** Aluminium panel with 18 mm plywood.

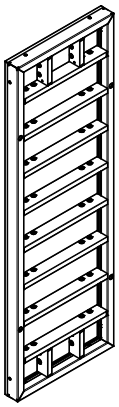

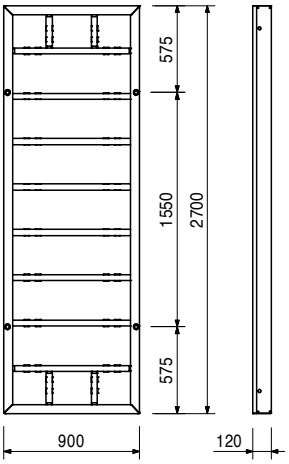

Item no.	Weight kg	
023870	49.300	**Panel Alu TRA 270 x 60** Aluminium panel with 18 mm plywood.

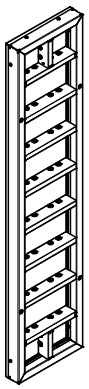

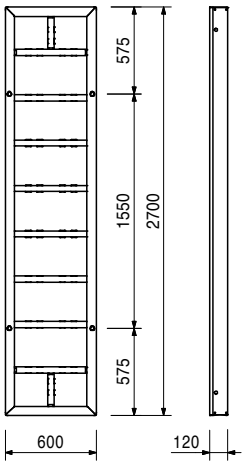

023880	31.400	**Panel Alu TRA 270 x 30** Aluminium panel with 18 mm plywood.

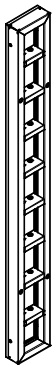

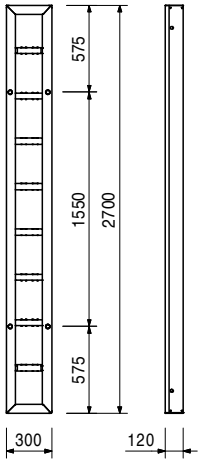

023860	60.700	**Multi Panel Alu TAM 270 x 72** Alu panel with 18 mm plywood. For oblique angles, wall connections etc.	**Complete with** 44 pc. 030300 Plug Ø 20/24 mm

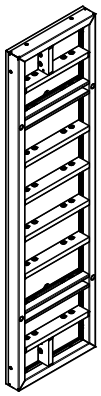

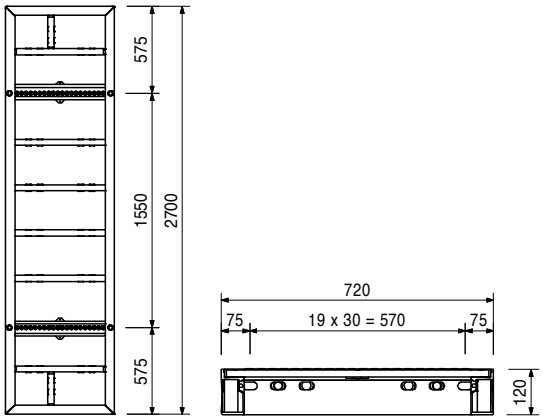

Item no.	Weight kg	
023891	42.100	**Corner Alu TAE 270/2** Alu element with 18 mm plywood. For 90° internal corners.

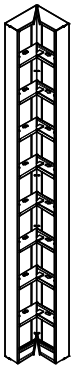

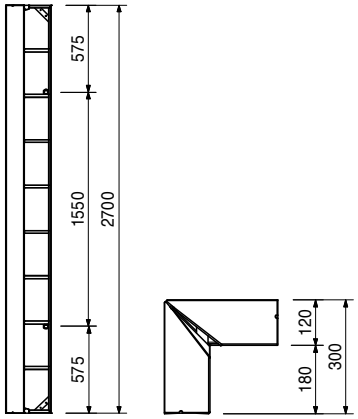

023900	33.600	**Panel Alu TRA 90 x 120** Aluminium panel with 18 mm plywood.

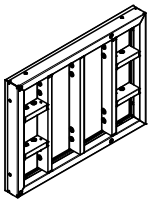

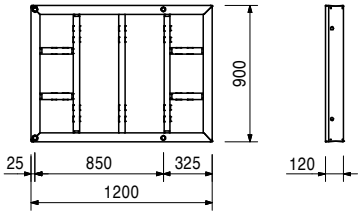

023950	18.000	**Panel Alu TRA 90 x 60** Aluminium panel with 18 mm plywood.

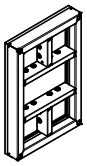

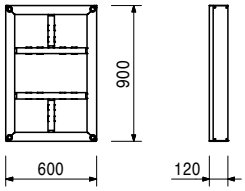

023960	10.700	**Panel Alu TRA 90 x 30** Aluminium panel with 18 mm plywood.

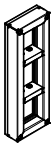

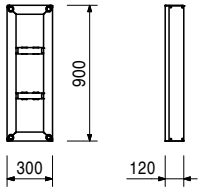

Item no.	Weight kg	
023980	23.500	**Multi Panel Alu TAM 90 x 72** Alu panel with 18 mm plywood. For oblique angles, wall connections etc. **Complete with** 44 pc. 030300 Plug Ø 20/24 mm

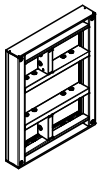

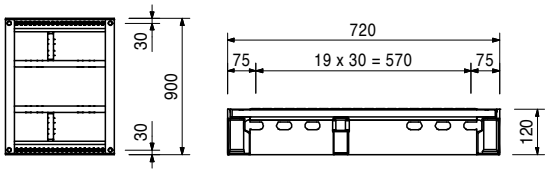

023971	15.200	**Corner Alu TAE 90/2** Alu element with 18 mm plywood. For 90° internal corners.

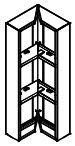

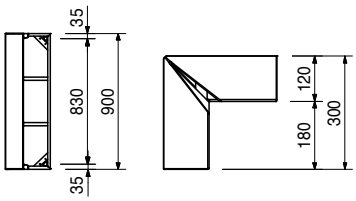

		Panels TRIO Structure TS/4 330
054305	374.000	**Panel TRIO Structure TS/4 330 x 240**
054315	183.000	**Panel TRIO Structure TS/4 330 x 120**
054325	131.000	**Panel TRIO Structure TS/4 330 x 90**
054335	112.000	**Panel TRIO Structure TS/4 330 x 72**
054355	101.000	**Panel TRIO Structure TS/4 330 x 60**
054365	71.100	**Panel TRIO Structure TS/4 330 x 30**
054345	128.000	**Panel TRIO Structure TSM/4 330 x 72**
054375	80.200	**Corner TRIO Structure TSE/4 330**
054395	10.800	**Wall Thickness Comp. WDAS/4 330 x 5, Alu**
054405	11.700	**Wall Thickness Comp. WDAS/4 330 x 6, Alu**
		Panel with 21 mm base plate.

		Panels TRIO Structure TS 270
022571	310.000	**Panel TRIO Structure TS 270 x 240**
022511	152.000	**Panel TRIO Structure TS 270 x 120**
022521	108.000	**Panel TRIO Structure TS 270 x 90**
022531	91.600	**Panel TRIO Structure TS 270 x 72**
022551	82.700	**Panel TRIO Structure TS 270 x 60**
022561	58.100	**Panel TRIO Structure TS 270 x 30**
022541	99.300	**Panel TRIO Structure TSM 270 x 72**
022581	65.400	**Corner TRIO Structure TSE 270**
023201	88.700	**Artic. Corner TRIO Structure TSGE 270**
023181	8.840	**Wall Thickness Comp. WDAS 270 x 5, Alu**
023191	9.560	**Wall Thickness Comp. WDAS 270 x 6, Alu**
		Panel with 21 mm base plate.

126740	155.000	**Panel TRIO Structure TS 240 x 120** Panel with 21 mm base plate.

Item no.	Weight kg	
		Panels TRIO Structure TS 120
022601	72.000	**Panel TRIO Structure TS 120 x 120**
022611	55.000	**Panel TRIO Structure TS 120 x 90**
022621	46.000	**Panel TRIO Structure TS 120 x 72**
022641	41.300	**Panel TRIO Structure TS 120 x 60**
022651	27.200	**Panel TRIO Structure TS 120 x 30**
022631	54.000	**Panel TRIO Structure TSM 120 x 72**
022661	30.900	**Corner TRIO Structure TSE 120**
023301	41.300	**Artic. Corner TRIO Structure TSGE 120**
023281	3.970	**Wall Thickness Comp. WDAS 120 x 5, Alu**
023291	4.320	**Wall Thickness Comp. WDAS 120 x 6, Alu**
		Panel with 21 mm base plate.

023500 4.580

Alignment Coupler BFD, galv.
For all panel connections for MAXIMO, TRIO and RUNDFLEX. Fillers up to 10 cm.

Technical Data
Permissible tension force 20.0 kN.

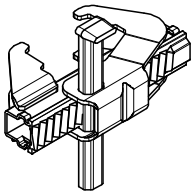

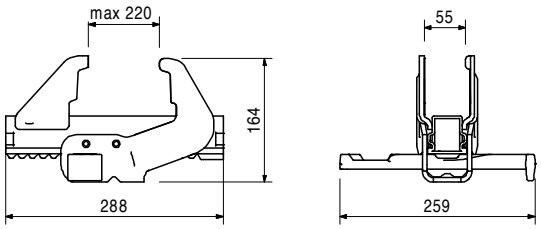

127732 11.000

Stopend Waler MX 15 - 40

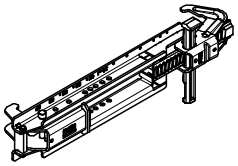

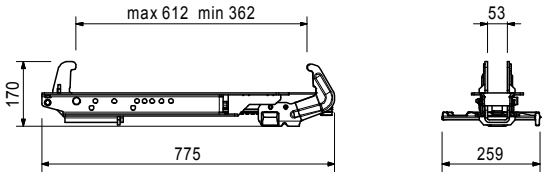

		Tension and Compression Braces MX
115350	6.330	**Tension and Compression Brace MX 15 – 40**
123842	9.090	**Tension and Compression Brace MX 15 – 100**

For use with foundation formwork up to 1.20 m high and as replacement for the top anchor of the MAXIMO 330.

Complete with
1 pc. 115331 Bolt Ø 12 x 96, galv.
1 pc. 018060 Cotter Pin 4/1, galv.

Note
Adjustable in 0.5-cm-increments from 15 to 40 cm and in 0.5-cm-increments from 15 to 100 cm.

Technical Data
Permissible tension and compressive force 9 kN.

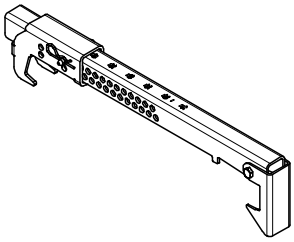

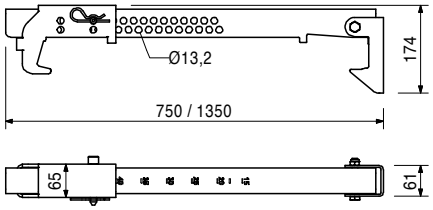

Item no.	Weight kg		
023550	12.300	**Compensation Waler TAR 85** For longitudinal compensation, height extensions, stopend formwork and special applications with TRIO and MAXIMO. With captive connecting components.	**Technical Data** Permissible bending moment 4.4 kNm.

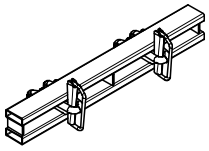

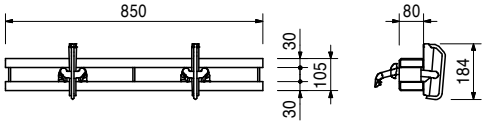

023551	8.520	**Waler 85** Corresponds to Compensation Waler TAR 85 but without mounting hooks.	**Technical Data** Permissible bending moment 4.4 kNm.

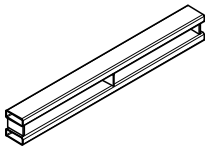

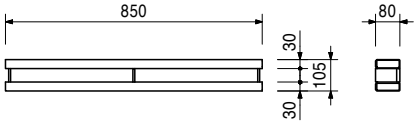

128387	8.900	**Projection Waler TVR 45/45-2** For connecting on internal corners without using TE Corners particularly for wall offsets.	

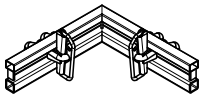

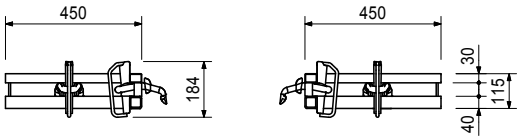

023920	78.400	**Universal Waler 245** For anchoring obliques angles especially with thick walls and for special applications.	**Complete with** 6 pc. 024180 Compensation Washer 20, galv. 3 pc. 104178 Spacer Unit HFT 3 pc. 024910 Bolt ISO 4014 M20 x 100-8.8, galv. 3 pc. 781053 Nut ISO 7042 M20-8, galv.

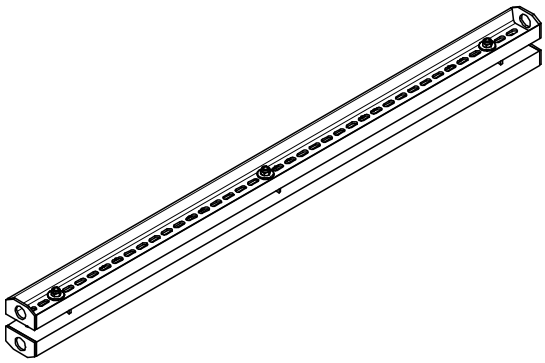

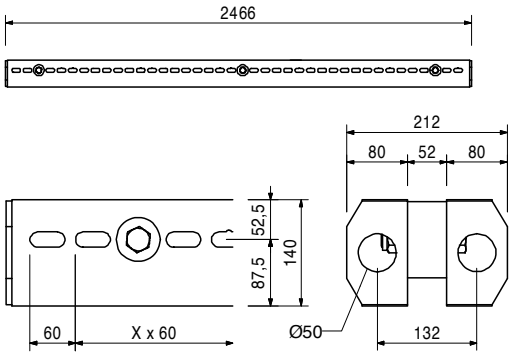

Item no.	Weight kg	
023930	4.100	**Waler Stop** For use with the Universal Waler 245.

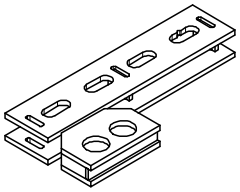

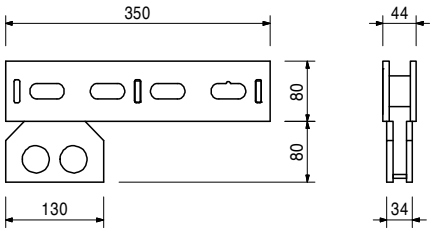

Accessories

024240	0.805	**Wedge KZ, galv.**
022030	2.170	**Tie Yoke, galv.**

023640	1.140	**Bulkhead Tie TS, galv.** For force application from the stopend formwork in MAXIMO and TRIO panels. DW 15 thread.	**Technical Data** Permissible tension force 20.0 kN.

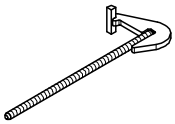

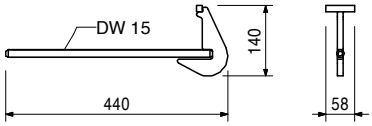

023660	3.300	**Brace Connector TRIO, galv.** For connecting push-pull props and kicker braces to MAXIMO and TRIO Panels. Mounted on vertical and horizontal struts.	**Complete with** 1 pc. 027170 Pin Ø 16 x 42, galv. 1 pc. 018060 Cotter Pin 4/1, galv.

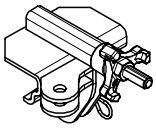

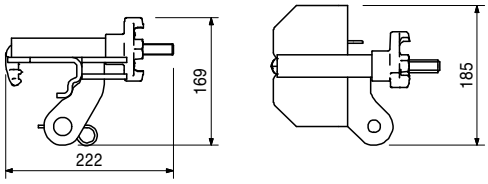

023820	0.375	**Hook Tie Head DW 15, galv.** For connecting accessories to MAXIMO and TRIO panels. DW 15 thread.	**Technical Data** Permissible tension force 20.0 kN.

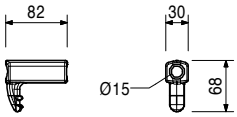

023650	0.769	**Hook Tie DW 15, l = 400 mm, galv.** For connecting accessories to MAXIMO and TRIO panels. DW 15 thread.	**Technical Data** Permissible tension force 20.0 kN.

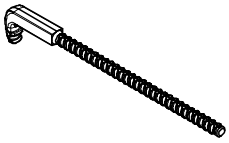

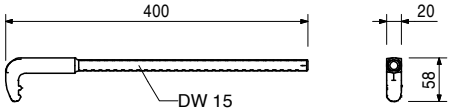

Item no.	Weight kg		
030300	0.002	**Plug Ø 20/24 mm** For sealing unused tie holes Ø 20, Ø 22, Ø 24 mm.	**Note** Delivery unit 250 pieces.

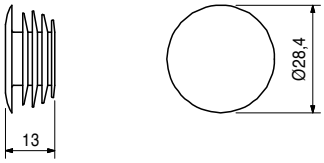

112588	5.520	**Stripping Bar TRIO**

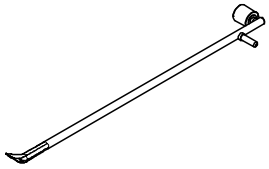

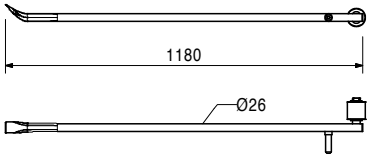

054240	1.900	**Chamfer Strip, l = 2.70 m** Chamfer strip made of plastic. For TRIO Column Formwork. Edge length 15 x 15 mm.

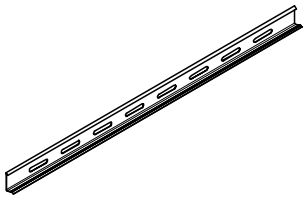

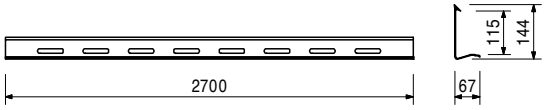

023630	2.080	**Top Tie Bracket-2 AH, galv.** For grid-independent anchoring outside of the panel, especially for foundations and height extensions.	**Technical Data** Permissible anchor tension force: Hole 1 = 30 kN Hole 2 = 15 kN

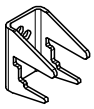

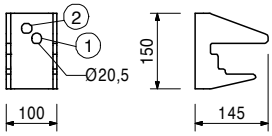

Item no.	Weight kg		
117321	31.000	**Lifting Gear Combi MX** For transporting stacks of MAXIMO and TRIO Panels. For attaching Lifting Hook MAXIMO 1.5 t and Stacking Device MAXIMO.	**Note** Follow Instructions for Use!

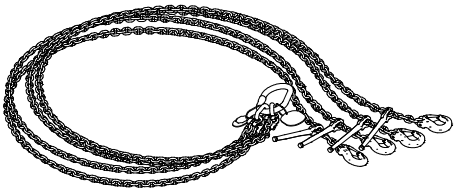

117322	25.000	**Lifting Gear MX** For transporting stacks of MAXIMO and TRIO Panels.	**Note** Follow Instructions for Use!

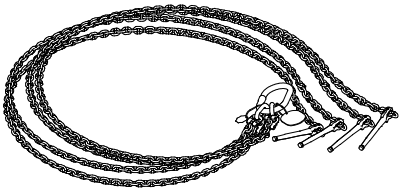

115168	7.470	**Lifting Hook MAXIMO 1.5 t** For transporting MAXIMO and TRIO Panels.	**Note** Follow Instructions for Use! **Technical Data** Permissible load-bearing capacity: Steel elements 1.5 t Alu elements 750 kg

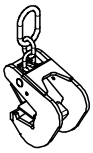

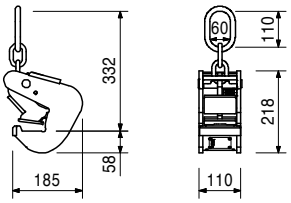

Item no.	Weight kg	
115058	7.450	**Stacking Device MAXIMO** For stacking and transportation of 2 – 5 MAXIMO or TRIO Panels of all sizes. Suitable for crane and fork-lift transport. **Note** Follow Instructions for Use! **Technical Data** Permissible load-bearing capacity 650 kg per post, 2.6 t per stack.

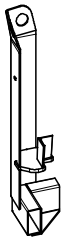

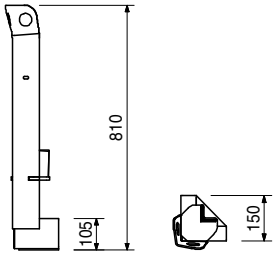

023440	0.312	**Lifting Pin TRIO** For easy carrying of TRIO Panels.

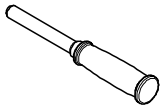

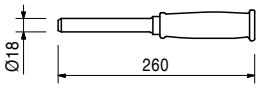

750303	0.014	**Stacking Aid TRIO DW 20** Prevents elements sliding and protects the plywood formlining against damage.

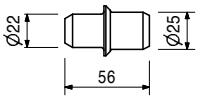

124554	0.386	**Stacking Device TRIO Corner**

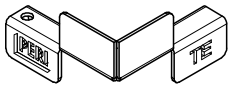

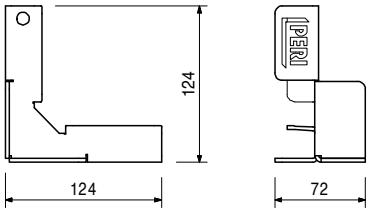

Item no.	Weight kg	
128313	0.395	**Stacking Device TRIO LI**

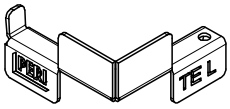

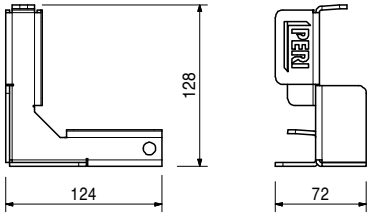

128494	0.395	**Stacking Device TRIO RE**

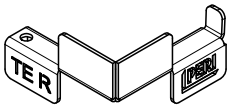

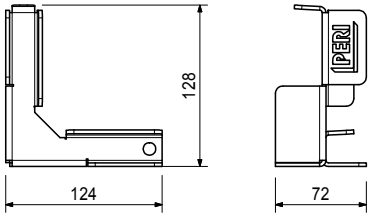

		Scaffold Brackets TRG
023670	12.600	**Scaffold Bracket TRG 80**
023680	16.700	**Scaffold Bracket TRG 120**

For assembly of a working and concreting scaffold with MAXIMO and TRIO. Mounted on horizontal and vertical struts.

Technical Data
Permissible load 150 kg/m²
with maximum width of influence 1.35 m.

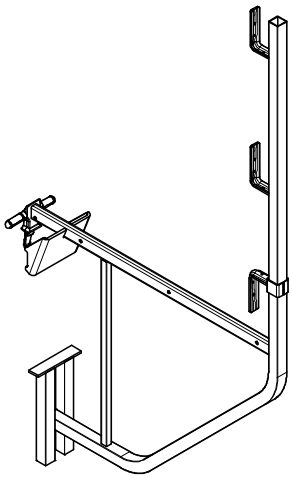

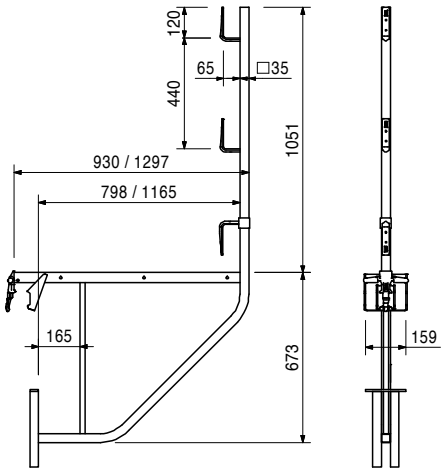

Item no.	Weight kg		
023590	13.000	**Scaffold Bracket TRG 100/112** For assembly of a working and concreting scaffold with TRIO and MAXIMO. Mounted on horizontal and vertical struts. When attaching to the top strut, the scaffolding platform can be cantilevered up to the front edge of the formlining.	**Complete with** 1 pc. 027170 Pin Ø 16 x 42, galv. 1 pc. 018060 Cotter Pin 4/1, galv. **Technical Data** Permissible load 150 kg/m² with maximum width of influence 1.35 m.

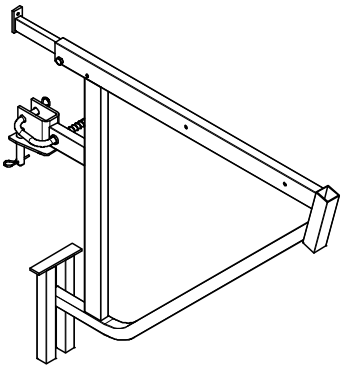

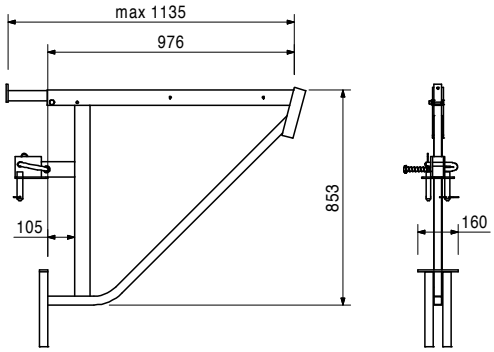

101592	2.810	**Guardrail Post Holder TRIO** For assembling of a guardrail to TRIO panels.	**Complete with** 1 pc. 018060 Cotter Pin 4/1, galv.

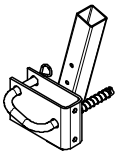

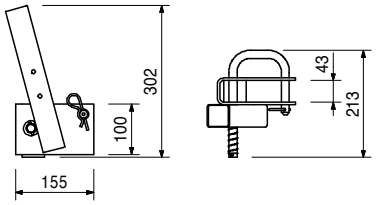

Accessories

116292	4.730	**Guardrail Post HSGP-2**

116292	4.730	**Guardrail Post HSGP-2** As guardrail for different systems.	

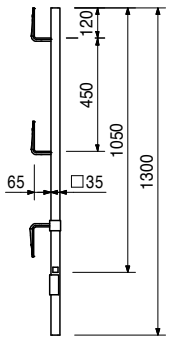

Item no.	Weight kg		
022950	129.000	**Concreting Platform TRIO 120 x 270** Working and concreting platform for MAXIMO and TRIO. Attached from above to the panel, self-securing.	**Technical Data** Permissible load 150 kg/m².

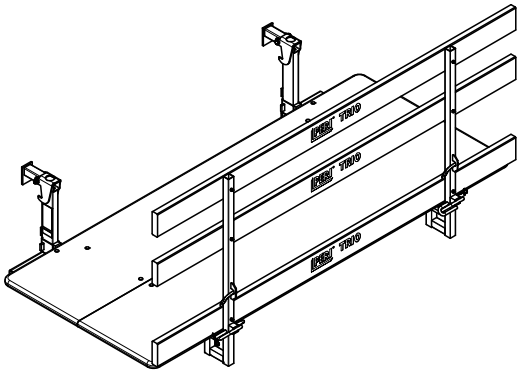

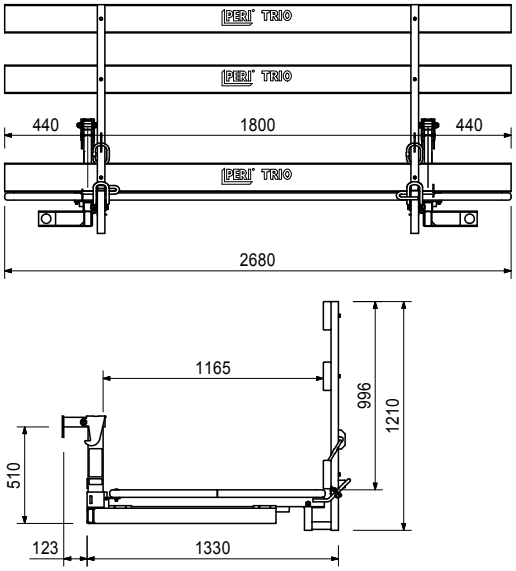

027680	49.600	**Connector SB-1, 2 - MX/TR/D** For assembly of Brace Frame SB-1, 2 to MAXIMO, TRIO and DOMINO panels.	**Technical Data** Permissible load-bearing point capacity 1.0 t with crane sling angle ≤ 15°.

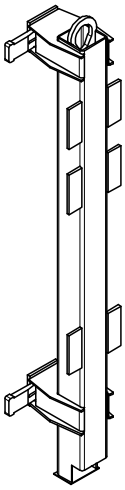

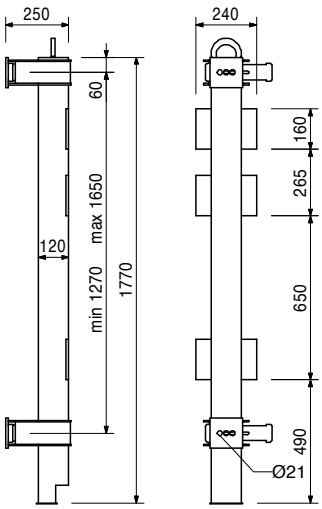

Accessories

027690	0.368	**Bolt SB-TRIO/DOMINO, galv.**
027590	2.400	**Hook Strap for SB-1, 2**
113255	0.414	**Bolt SB-MAXIMO, galv.**
114107	1.190	**Sleeve SB-MAXIMO, galv.**
114417	1.400	**Sleeve SB-MAXIMO WDMX**

Item no.	Weight kg	
025740	9.140	**Connector SB-A, B, C - MX/TR/D** For connecting MAXIMO, TRIO and DOMINO panels with Brace Frames SB-A0, A, B, C.

Note
1 piece per anchor point.

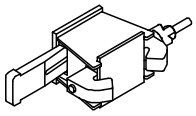

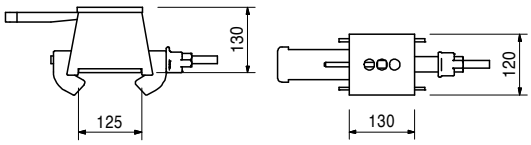

Accessories

027690	0.368	**Bolt SB-TRIO/DOMINO, galv.**
113255	0.414	**Bolt SB-MAXIMO, galv.**
114107	1.190	**Sleeve SB-MAXIMO, galv.**
114417	1.400	**Sleeve SB-MAXIMO WDMX**

027690	0.368	**Bolt SB-TRIO/DOMINO, galv.** For panel formwork with 12 cm overall thickness.

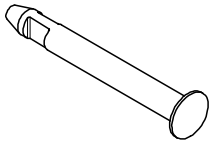

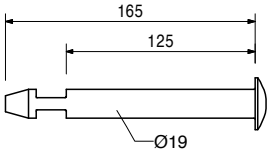

Accessories

114107	1.190	**Sleeve SB-MAXIMO, galv.**
114417	1.400	**Sleeve SB-MAXIMO WDMX**

023010	2.330	**Foundation Tie Clamp TRIO TLS** For anchoring foundation formwork in combination with the Perforated Foundation Tie.

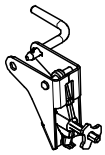

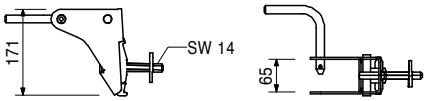

023020	0.676	**Perforated Foundation Tie, 25 m** For use with Foundation Tie Clamp TRIO, DOMINO, LIWA and HANDSET.

Technical Data
Permissible tension force 12.9 kN.

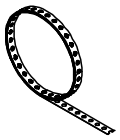

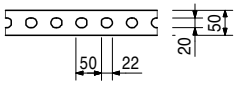

023800	4.840	**Foundation Strap TRIO** For connecting TRIO panels with 6 cm wide edge profiles, assembled in a "windmill" configuration.

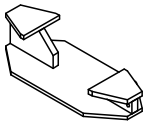

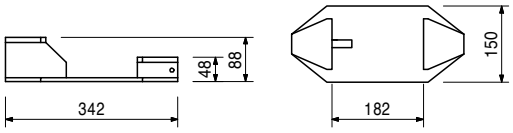

Item no.	Weight kg		
117466	10.600	**Push-Pull Prop RS 210, galv.** Extension length l = 1.30 – 2.10 m. For aligning PERI formwork systems and precast concrete elements.	**Note** Permissible load see PERI Design Tables.

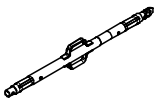

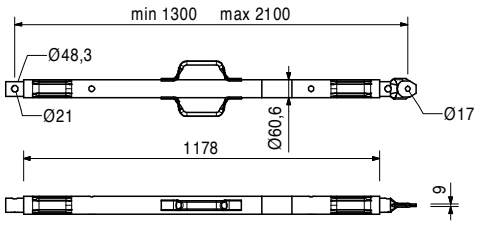

118238	12.200	**Push-Pull Prop RS 260, galv.** Extension length l = 2.30 – 2.60 m. For aligning PERI formwork systems and precast concrete elements.	**Note** Permissible load see PERI Design Tables.

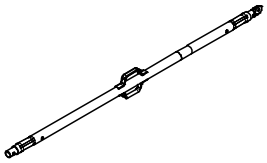

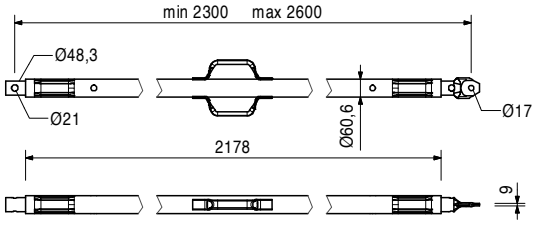

117467	15.500	**Push-Pull Prop RS 300, galv.** Extension length l = 1.90 – 3.00 m. For aligning PERI formwork systems and precast concrete elements.	**Note** Permissible load see PERI Design Tables.

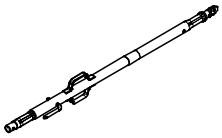

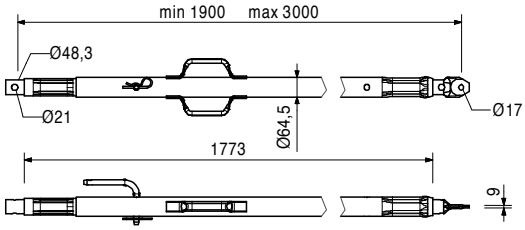

117468	23.000	**Push-Pull Prop RS 450, galv.** Extension length l = 2.80 – 4.50 m. For aligning PERI formwork systems and precast concrete elements.	**Note** Permissible load see PERI Design Tables.

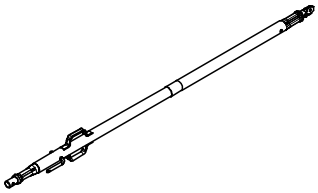

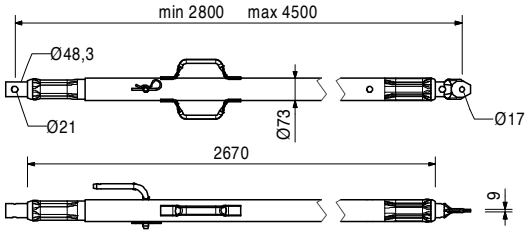

Item no.	Weight kg		
117469	40.000	**Push-Pull Prop RS 650, galv.** Extension length l = 4.30 – 6.50 m. For aligning PERI formwork systems and precast concrete elements.	**Note** Permissible load see PERI Design Tables.

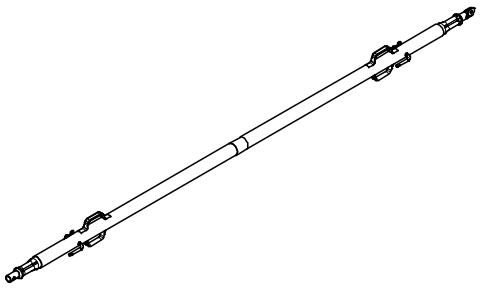

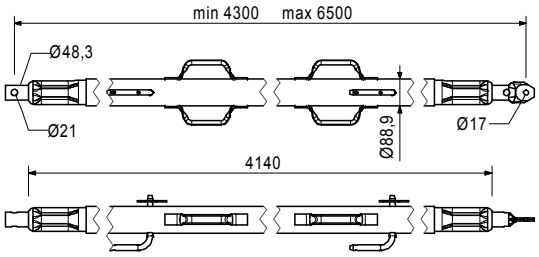

028990	115.000	**Push-Pull Prop RS 1000, galv.** Extension length l = 6.40 – 10.00 m. For aligning PERI formwork systems.	**Note** Permissible load see PERI Design Tables.

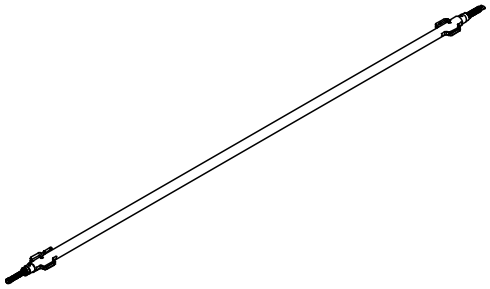

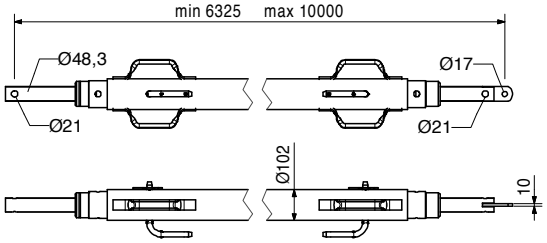

103800	271.000	**Push-Pull Prop RS 1400, galv.** Extension length l = 6.40 – 14.00 m. For aligning PERI formwork systems.	**Note** Permissible load see PERI Design Tables. Chain can be operated from bottom.

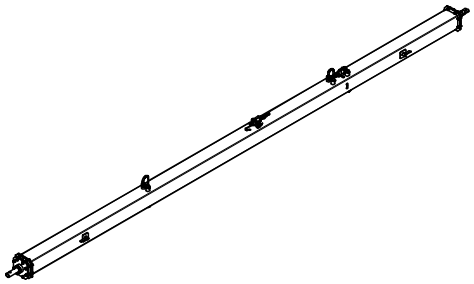

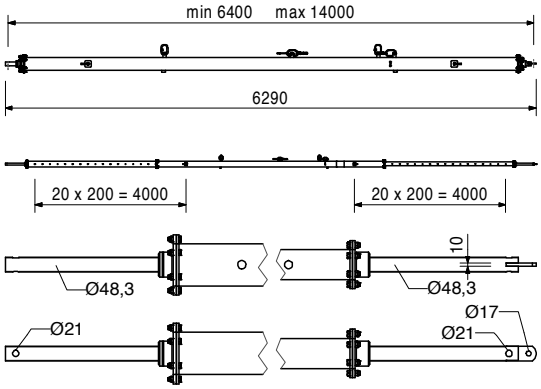

Item no.	Weight kg	
117343	3.250	**Base Plate-2 for RS 210 – 1400, galv.** For assembly of Push-Pull Props RS 210, 260, 300, 450, 650, 1000 and 1400. **Complete with** 2 pc. 105400 Pin Ø 20 x 140, galv. 2 pc. 018060 Cotter Pin 4/1, galv.

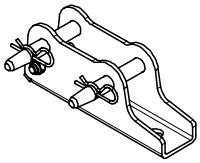

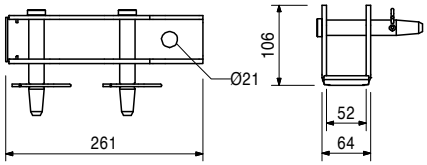

Accessories

124777	0.210	**Anchor Bolt PERI 14/20 x 130**

126666	3.070	**Base Plate-3 for RS 210-1400** For assembly of Push-Pull Props RS 210, 260, 300, 450, 650, 1000 and 1400. **Complete with** 2 pc. 105400 Pin Ø 20 x 140, galv. 2 pc. 018060 Cotter Pin 4/1, galv. 1 pc. 113063 Bolt ISO 4014 M12 x 80-8.8, galv.

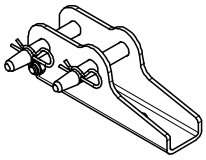

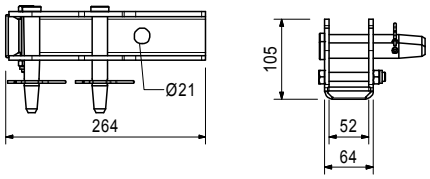

028010	17.900	**Push-Pull Prop RSS I** Extension length l = 2.05 – 2.94 m. For aligning PERI formwork systems. **Note** Permissible load see PERI Design Tables.

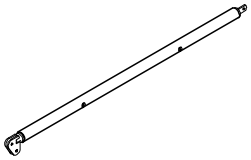

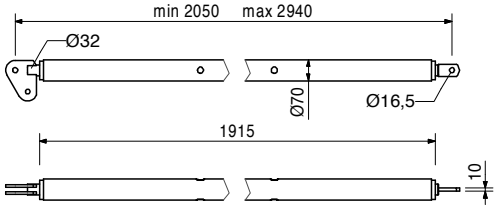

113397	1.600	**Spindle Handle RSS / AV** Spindle Handle for screwing on Push-Pull-Props RSS I, RSS II, RSS III and Kickers AV 210 and AV 190 complete with 2 bolts and nuts M8.

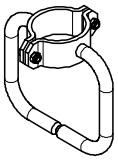

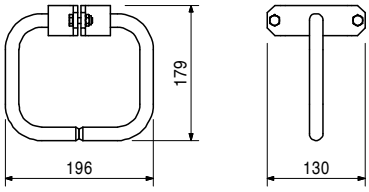

Item no.	Weight kg		
028020	22.000	**Push-Pull Prop RSS II** Extension length l = 2.91 – 3.80 m. For aligning PERI formwork systems.	**Note** Permissible load see PERI Design Tables.

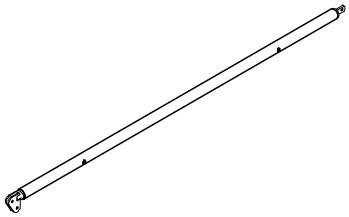

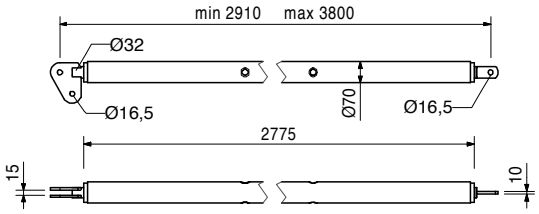

028030	38.400	**Push-Pull Prop RSS III** Extension length l = 4.60 – 6.00 m. For aligning PERI formwork systems.	**Note** Permissible load see PERI Design Tables.

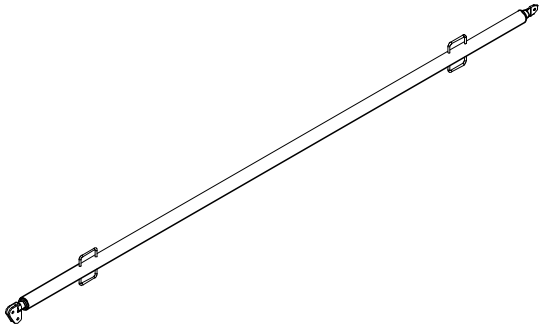

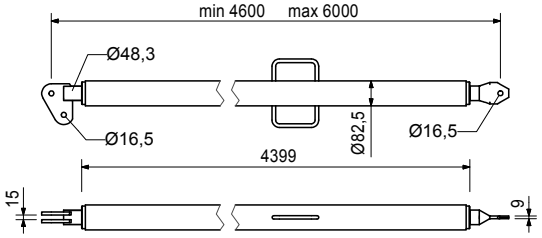

106000	1.820	**Base Plate-2 for RSS, galv.** For assembly of RSS Push-Pull Props.	**Complete with** 1 pc. 027170 Pin Ø 16 x 42, galv. 1 pc. 018060 Cotter Pin 4/1, galv.

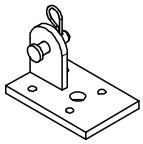

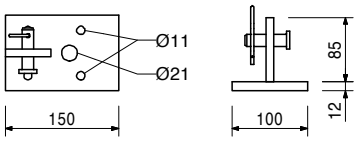

Accessories

124777	0.210	**Anchor Bolt PERI 14/20 x 130**

Item no.	Weight kg		min. L	max. L
		Kickers AV		
057087	3.720	**Kicker AV 82**	500	820
057088	4.410	**Kicker AV 111**	790	1110

For aligning PERI formwork systems.

Complete with
1 pc. 027170 Pin Ø 16 x 42, galv.
1 pc. 018060 Cotter Pin 4/1, galv.
Note
Permissible load see PERI Design Tables.

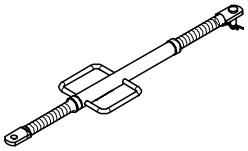

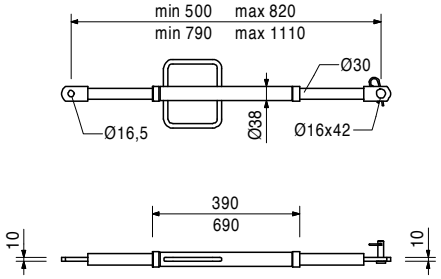

028110	5.180	**Kicker AV 140**

Extension length l = 1.08 – 1.40 m.
For aligning PERI formwork systems.

Complete with
1 pc. 027170 Pin Ø 16 x 42, galv.
1 pc. 018060 Cotter Pin 4/1, galv.
Note
Permissible load see PERI Design Tables.

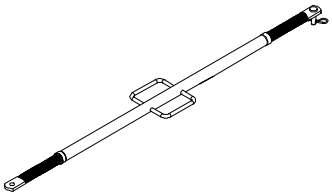

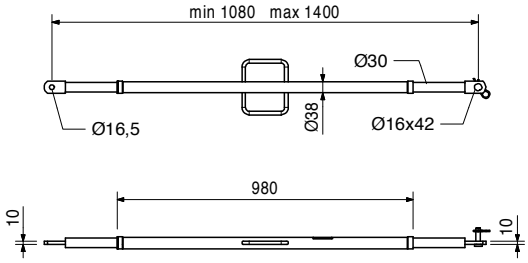

108135	12.900	**Kicker AV 210**

Extension length l = 1.28 – 2.10 m.
For aligning PERI formwork systems.

Complete with
1 pc. 027170 Pin Ø 16 x 42, galv.
1 pc. 018060 Cotter Pin 4/1, galv.
Note
Permissible load see PERI Design Tables.

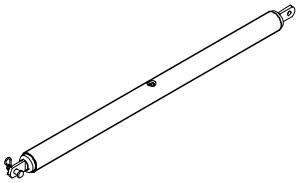

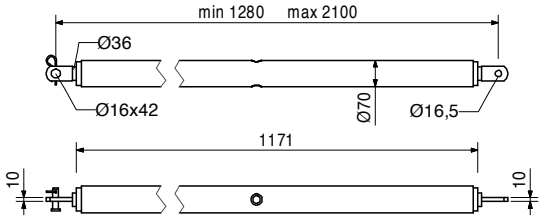

Item no.	Weight kg		
028120	17.000	**Kicker AV RSS III** Extension length l = 2.03 – 2.92 m. For aligning PERI formwork systems.	**Complete with** 1 pc. 027170 Pin Ø 16 x 42, galv. 1 pc. 018060 Cotter Pin 4/1, galv. **Note** Permissible load see PERI Design Tables.

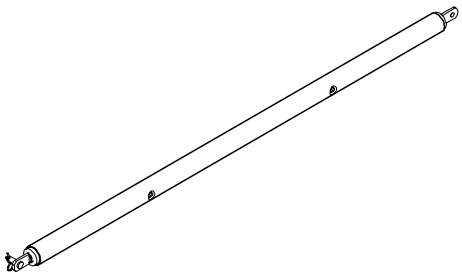

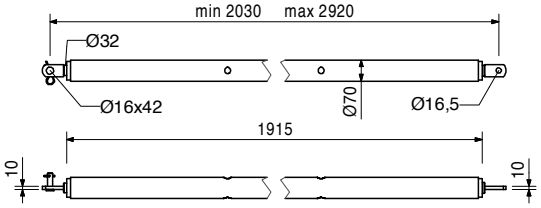

124777	0.210	**Anchor Bolt PERI 14/20 x 130** For temporary fixation to reinforced concrete structures.	**Note** See PERI data sheet! Drilling Ø 14 mm.

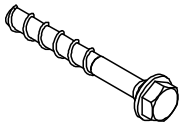

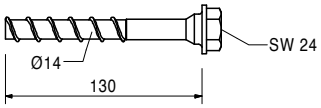

The optimal System for every Project and every Requirement


Wall Formwork


Column Formwork


Slab Formwork


Climbing Systems


Tunnel Formwork


Bridge Formwork


Shoring Systems


Construction Scaffold


Facade Scaffold


Industrial Scaffold


Access


Protection Scaffold

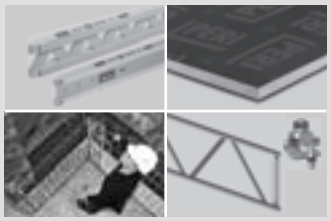
System-Independent Accessories


Services

DE en 12 | 2015 3ma 791723 © PERI GmbH

PERI GmbH
Formwork Scaffolding Engineering
Rudolf-Diesel-Strasse 19
89264 Weissenhorn
Germany
Tel. +49 (0)7309.950-0
Fax +49 (0)7309.951-0
info@peri.com
www.peri.com